Goodman®

Air Conditioning & Heating

# Product Specifications

## UP TO 14 SEER

## 2 TO 5 TONS

**Cooling Capacity: 24,400 - 57,000 BTU/h**

**Heating Capacity: 22,800 - 54,500 BTU/h**

* To receive the 10-Year Parts Limited Warranty, online registration must be completed within 60 days of installation. Online registration is not required in California or Québec. Full warranty details available at www.goodmamfg.com.

# GPH14H

## Packaged Heat Pump

The Goodman® brand GPH14H Packaged Heat Pump provides energy-efficient cooling and heating performance in one self-contained unit. The GPH14H is housed in a heavy-gauge, galvanized-steel cabinet that offers a high-quality, UV-resistant powder-paint finish and allows for a ground-level or rooftop mount.

### Standard Features

- Energy-efficient compressor with internal relief valve
- EEM blower motor
- Quiet horizontal discharge
- Copper tube/aluminum fin coil
- Totally enclosed, permanently lubricated condenser fan motor
- Fully charged system
- Electric heat kit available as a field-installed option
- AHRI Certified
- ETL Listed

### Cabinet Features

- Heavy-gauge galvanized-steel cabinet with attractive Architectural Gray powder-paint finish
- Fully insulated blower compartment with convenient access panels
- Louvered condenser coil protection
- One footprint; three heights

### Contents


Nomenclature ..... 2
Product Specifications ..... 3
Expanded Cooling Data ..... 4
Expanded Heating Data ..... 16
Heat Kit Electrical Data ..... 18
Airflow Data ..... 19
Dimensions ..... 20
Wiring Diagram ..... 21
Accessories ..... 22

# NOMENCLATURE

| G | P | H | 14 | 36 | H | 4 | 1 | A | * |
|---|---|---|---|---|---|---|---|---|---|
| 1 | 2 | 3 | 4,5 | 6,7 | 8 | 9 | 10 | 11 | 12 |

**Brand**
G Goodman or Distinctions™

**Product Category**
P Packaged Unit

**Type**
H Heat Pump
C Air Conditioner

**Efficiency**
13 13 SEER
14 14 SEER
15 15 SEER
16 16 SEER

**Nominal Capacity**
24 2 Tons
30 2½ tons
36 3 Tons
42 3½ Tons
48 4 Tons
60 5 Tons

**Configuration**
H Horizontal
M Multi-position

**Refrigerant**
2 R-22
4 R-410A

**Voltage Designator**
1 208-230/1/60
3 208-230/3/60
4 460/3/60

**Engineering**
Major Revision

**Engineering**
Minor Revision

**Important EnergyStar Notice:** EnergyStar ratings are dependent upon conditions beyond equipment installation. Proper sizing and installation of equipment is critical to achieve optimal performance. Split system air conditioners and heat pumps must be matched with appropriate coil components to meet EnergyStar criteria. Ask your contractor for details or visit www.energystar.gov.

# SPECIFICATIONS

| | GPH14 24H41 | GPH14 30H41 | GPH14 36H41 | GPH14 42H41 | GPH14 48H41 | GPH14 60H41 |
|---|---|---|---|---|---|---|
| **Cooling Capacity** | | | | | | |
| AHRI Cooling Capacity (BTU/h) | 24,400 | 29,600 | 36,000 | 40,000 | 46,000 | 57,000 |
| Sensible BTU/h | 18,200 | 23,400 | 27,400 | 29,600 | 35,400 | 40,500 |
| SEER / EER | 15.0 / 12.2 | 14.50 / 12.2 | 14.3.0 / 12 | 14.2 / 12 | 14.5/12.1 | 14.2/12 |
| Decibels | 76 | 76 | 78 | 78 | 80 | 80 |
| AHRI Numbers | 3405592 | 3405593 | 3405594 | 3405598 | 3405599 | 3405602 |
| **Heating Capacity** | | | | | | |
| BTU/h (47°F) | 22,800 | 27,600 | 33,000 | 37,600 | 45,000 | 54,500 |
| C.O.P. (47°F) | 3.8 | 3.8 | 3.7 | 3.8 | 3.9 | 3.6 |
| BTU/h (17°F) | 13,000 | 15,400 | 21,400 | 21,600 | 26,000 | 33,800 |
| C.O.P. (17°F) | 2.4 | 2.5 | 2.4 | 2.4 | 2.4 | 2.5 |
| HSPF | 8.0 | 8.3 | 8.5 | 8.3 | 8.3 | 8.4 |
| **Evaporator Motor** | | | | | | |
| Type | X-13 | X-13 | X-13 | X-13 | X-13 | X-13 |
| Wheel (D x W) | 10 x 8 | 10 x 8 | 10 x 8 | 10 x 8 | 10 x 8 | 11 x 8 |
| Cooling CFM | 850 | 1,050 | 1,200 | 1,300 | 1,600 | 1,600 |
| Fan-Only CFM | 800 | 950 | 1,100 | 1,200 | 1,400 | 1,600 |
| RLA | 1.5 | 1.86 | 1.86 | 2.9 | 2.9 | 2.9 |
| No. of Speeds | 5 | 5 | 5 | 5 | 5 | 5 |
| Horsepower - RPM | ½ - 1,050 | ½ - 1,050 | ½ - 1,050 | ½ - 1,050 | ¾ - 1,050 | ¾ - 1,050 |
| **Evaporator Coil** | | | | | | |
| Face Area ($ft^2$) | 5.25 | 4.67 | 5.2 | 6.2 | 6.2 | 7.0 |
| Rows Deep/ Fins per Inch | 3/ 16 | 4/ 16 | 3/ 14 | 4/ 14 | 4/ 14 | 4/ 14 |
| Indoor Metering Device Size | 0.057 | 0.065 | 0.068 | 0.072 | 0.076 | 0.088 |
| Filter Size ($ft^2$) | 20 x 20 x 1 | 20 x 25 x 1 | 25 x 25 x 1 | (2) 20 x 20 x 1 | (2) 20 x 20 x 1 | (2) 20 x 25 x 1 |
| Drain Size (NPT) | ¾" | ¾" | ¾" | ¾" | ¾" | ¾" |
| Refrigerant Charge (oz.) | 85 | 105 | 125 | 150 | 190 | 200 |
| **Condenser Fan / Coil** | | | | | | |
| Horsepower - RPM | 1/6 - 815 | 1/6 - 815 | ¼ - 1075 | ¼ - 1075 | ¼ - 1075 | ¼ - 1075 |
| RLA/LRA | 1.1 / 1.7 | 1.1 / 1.7 | 1.5 /3.0 | 1.4 / 2.9 | 1.4 / 2.9 | 1.4 / 2.9 |
| Fan Diameter / # Fan Blades | 22 / 3 | 22 / 3 | 22 / 4 | 22 / 4 | 22 / 4 | 22 / 4 |
| Face Area ($ft^2$) | 13.4 | 13.4 | 17 | 17 | 19.1 | 19.1 |
| Outdoor Metering Device Size | 0.049 | 0.047 | 0.067 | 0.065 | 0.065 | 0.071 |
| Rows Deep/ Fins per Inch | 1 / 24 | 1 / 24 | 1 / 24 | 1 / 24 | 2 / 16 | 2 / 16 |
| **Electrical Data** | | | | | | |
| Voltage/Phase/ Frequency | 208-230/1/60 | 208-230/1/60 | 208-230/1/60 | 208-230/1/60 | 208-230/1/60 | 208-230/1/60 |
| Compressor RLA/LRA | 12.8 / 58.3 | 14.1 / 73 | 16.7 / 79 | 17.9 / 112 | 19.9 / 109 | 26.4 / 134 |
| Indoor Blower FLA | 1.5 | 1.86 | 1.86 | 2.9 | 2.9 | 2.9 |
| Outdoor Fan RLA | 1.1 | 1.1 | 1.4 | 1.4 | 1.4 | 1.4 |
| Total Unit Amps | 15.4 | 17.06 | 19.96 | 22.2 | 24.2 | 30.7 |
| Min. Circuit Ampacity[1] | 18.6 | 20.6 | 24.2 | 26.6 | 29.2 | 40.2 |
| Min. Overcurrent Protection (amps)[2] | 30 | 30 | 40 | 40 | 45 | 60 |
| **Ship Weight (lbs)** | 325 | 325 | 385 | 385 | 415 | 415 |
| **Operating Weight (lbs)** | 315 | 315 | 375 | 375 | 405 | 405 |

[1] Wire size should be determined in accordance with National Electrical Codes. Extensive wire runs will require larger wire sizes.
[2] Must use time-delay fuses or HACR-type circuit breakers of the same size as noted.
**Note:** Always check the S&R plate for electrical data on the unit being installed.

# EXPANDED COOLING DATA — GPH1424H41A

| | | | Outdoor Ambient Temperature | | | | | | | | | | | | | | | | | | | | | | | |
|---|---|---|---|---|---|---|---|---|---|---|---|---|---|---|---|---|---|---|---|---|---|---|---|---|---|---|
| | | | 65 | | | | 75 | | | | 85 | | | | 95 | | | | 105 | | | | 115 | | | |
| | | | Entering Indoor Wet Bulb Temperature | | | | | | | | | | | | | | | | | | | | | | | |
| IDB | Airflow | | 59 | 63 | 67 | 71 | 59 | 63 | 67 | 71 | 59 | 63 | 67 | 71 | 59 | 63 | 67 | 71 | 59 | 63 | 67 | 71 | 59 | 63 | 67 | 71 |
| 70 | 955 | MBh | 23.9 | 24.8 | 27.2 | - | 23.4 | 24.2 | 26.5 | - | 22.8 | 23.6 | 25.9 | - | 22.2 | 23.1 | 25.3 | - | 21.1 | 21.9 | 24.0 | - | 19.6 | 20.3 | 22.2 | - |
| | | S/T | 0.75 | 0.62 | 0.43 | - | 0.77 | 0.65 | 0.45 | - | 0.79 | 0.66 | 0.46 | - | 0.82 | 0.68 | 0.47 | - | 0.85 | 0.71 | 0.49 | - | 0.86 | 0.72 | 0.50 | - |
| | | ∆ T | 17 | 15 | 11 | - | 17 | 15 | 11 | - | 17 | 15 | 11 | - | 18 | 15 | 12 | - | 17 | 15 | 11 | - | 16 | 14 | 11 | - |
| | | kW | 1.54 | 1.57 | 1.62 | - | 1.66 | 1.70 | 1.75 | - | 1.77 | 1.81 | 1.87 | - | 1.86 | 1.91 | 1.97 | - | 1.95 | 1.99 | 2.06 | - | 2.02 | 2.06 | 2.13 | - |
| | | Amps | 6.4 | 6.5 | 6.7 | - | 6.8 | 7.0 | 7.2 | - | 7.4 | 7.6 | 7.8 | - | 7.9 | 8.0 | 8.3 | - | 8.3 | 8.5 | 8.8 | - | 8.8 | 9.0 | 9.3 | - |
| | | HI PR | 236 | 253 | 268 | - | 264 | 284 | 300 | - | 301 | 323 | 342 | - | 342 | 368 | 389 | - | 385 | 414 | 438 | - | 425 | 458 | 484 | - |
| | | LO PR | 111 | 118 | 129 | - | 117 | 125 | 136 | - | 122 | 129 | 141 | - | 128 | 136 | 148 | - | 134 | 143 | 156 | - | 139 | 147 | 161 | - |
| | 850 | MBh | 23.2 | 24.1 | 26.4 | - | 22.7 | 23.5 | 25.7 | - | 22.1 | 22.9 | 25.1 | - | 21.6 | 22.4 | 24.5 | - | 20.5 | 21.3 | 23.3 | - | 19.0 | 19.7 | 21.6 | - |
| | | S/T | 0.71 | 0.59 | 0.41 | - | 0.74 | 0.62 | 0.43 | - | 0.76 | 0.63 | 0.44 | - | 0.78 | 0.65 | 0.45 | - | 0.81 | 0.68 | 0.47 | - | 0.82 | 0.68 | 0.47 | - |
| | | ∆ T | 18 | 15 | 12 | - | 18 | 16 | 12 | - | 18 | 16 | 12 | - | 18 | 16 | 12 | - | 18 | 16 | 12 | - | 17 | 15 | 11 | - |
| | | kW | 1.52 | 1.56 | 1.61 | - | 1.65 | 1.68 | 1.74 | - | 1.75 | 1.79 | 1.85 | - | 1.85 | 1.89 | 1.96 | - | 1.93 | 1.97 | 2.04 | - | 2.00 | 2.05 | 2.12 | - |
| | | Amps | 6.3 | 6.5 | 6.6 | - | 6.8 | 6.9 | 7.1 | - | 7.3 | 7.5 | 7.7 | - | 7.8 | 8.0 | 8.2 | - | 8.3 | 8.5 | 8.7 | - | 8.7 | 8.9 | 9.2 | - |
| | | HI PR | 233 | 251 | 265 | - | 262 | 282 | 297 | - | 298 | 320 | 338 | - | 339 | 365 | 385 | - | 381 | 410 | 433 | - | 421 | 453 | 479 | - |
| | | LO PR | 110 | 117 | 127 | - | 116 | 123 | 135 | - | 120 | 128 | 140 | - | 127 | 135 | 147 | - | 133 | 141 | 154 | - | 137 | 146 | 159 | - |
| | 745 | MBh | 21.4 | 22.2 | 24.3 | - | 20.9 | 21.7 | 23.8 | - | 20.4 | 21.2 | 23.2 | - | 19.9 | 20.7 | 22.6 | - | 18.9 | 19.6 | 21.5 | - | 17.5 | 18.2 | 19.9 | - |
| | | S/T | 0.69 | 0.57 | 0.40 | - | 0.71 | 0.59 | 0.41 | - | 0.73 | 0.61 | 0.42 | - | 0.75 | 0.63 | 0.44 | - | 0.78 | 0.65 | 0.45 | - | 0.79 | 0.66 | 0.46 | - |
| | | ∆ T | 18 | 16 | 12 | - | 18 | 16 | 12 | - | 18 | 16 | 12 | - | 19 | 16 | 12 | - | 18 | 16 | 12 | - | 17 | 15 | 11 | - |
| | | kW | 1.49 | 1.52 | 1.57 | - | 1.60 | 1.64 | 1.69 | - | 1.71 | 1.75 | 1.81 | - | 1.80 | 1.84 | 1.90 | - | 1.88 | 1.92 | 1.99 | - | 1.95 | 1.99 | 2.06 | - |
| | | Amps | 6.2 | 6.3 | 6.5 | - | 6.6 | 6.8 | 7.0 | - | 7.1 | 7.3 | 7.5 | - | 7.6 | 7.8 | 8.0 | - | 8.1 | 8.2 | 8.5 | - | 8.5 | 8.7 | 9.0 | - |
| | | HI PR | 226 | 243 | 257 | - | 254 | 273 | 288 | - | 289 | 311 | 328 | - | 329 | 354 | 374 | - | 370 | 398 | 420 | - | 409 | 440 | 464 | - |
| | | LO PR | 106 | 113 | 124 | - | 112 | 120 | 131 | - | 117 | 124 | 136 | - | 123 | 131 | 143 | - | 129 | 137 | 149 | - | 133 | 142 | 155 | - |
| 75 | 955 | MBh | 24.3 | 25.0 | 27.1 | 29.1 | 23.7 | 24.5 | 26.5 | 28.4 | 23.2 | 23.9 | 25.8 | 27.7 | 22.6 | 23.3 | 25.2 | 27.1 | 21.5 | 22.1 | 23.9 | 25.7 | 19.9 | 20.5 | 22.2 | 23.8 |
| | | S/T | 0.85 | 0.76 | 0.57 | 0.37 | 0.88 | 0.79 | 0.60 | 0.38 | 0.90 | 0.81 | 0.61 | 0.39 | 0.93 | 0.83 | 0.63 | 0.41 | 0.97 | 0.86 | 0.65 | 0.42 | 0.97 | 0.87 | 0.66 | 0.42 |
| | | ∆ T | 20 | 18 | 15 | 10 | 20 | 19 | 15 | 10 | 20 | 19 | 15 | 10 | 20 | 19 | 15 | 11 | 20 | 18 | 15 | 10 | 19 | 17 | 14 | 10 |
| | | kW | 1.55 | 1.58 | 1.64 | 1.69 | 1.67 | 1.71 | 1.77 | 1.83 | 1.78 | 1.82 | 1.89 | 1.95 | 1.88 | 1.92 | 1.99 | 2.06 | 1.96 | 2.01 | 2.08 | 2.15 | 2.03 | 2.08 | 2.15 | 2.23 |
| | | Amps | 6.4 | 6.6 | 6.8 | 7.0 | 6.9 | 7.1 | 7.3 | 7.5 | 7.5 | 7.6 | 7.9 | 8.1 | 7.9 | 8.1 | 8.4 | 8.7 | 8.4 | 8.6 | 8.9 | 9.2 | 8.9 | 9.1 | 9.4 | 9.7 |
| | | HI PR | 238 | 256 | 270 | 282 | 267 | 287 | 303 | 316 | 304 | 327 | 345 | 360 | 346 | 372 | 393 | 410 | 389 | 419 | 442 | 461 | 430 | 463 | 488 | 509 |
| | | LO PR | 112 | 119 | 130 | 138 | 118 | 126 | 137 | 146 | 123 | 131 | 143 | 152 | 129 | 137 | 150 | 160 | 135 | 144 | 157 | 167 | 140 | 149 | 163 | 173 |
| | 850 | MBh | 23.6 | 24.3 | 26.3 | 28.2 | 23.1 | 23.7 | 25.7 | 27.6 | 22.5 | 23.2 | 25.1 | 26.9 | 22.0 | **22.6** | 24.5 | 26.3 | 20.9 | 21.5 | 23.2 | 25.0 | 19.3 | 19.9 | 21.5 | 23.1 |
| | | S/T | 0.81 | 0.72 | 0.55 | 0.35 | 0.84 | 0.75 | 0.57 | 0.37 | 0.86 | 0.77 | 0.58 | 0.37 | 0.89 | **0.79** | 0.60 | 0.39 | 0.92 | 0.82 | 0.62 | 0.40 | 0.93 | 0.83 | 0.63 | 0.40 |
| | | ∆ T | 21 | 19 | 16 | 11 | 21 | 19 | 16 | 11 | 21 | 19 | 16 | 11 | 21 | **19** | 16 | 11 | 21 | 19 | 16 | 11 | 19 | 18 | 15 | 10 |
| | | kW | 1.54 | 1.57 | 1.62 | 1.68 | 1.66 | 1.70 | 1.75 | 1.81 | 1.77 | 1.81 | 1.87 | 1.93 | 1.86 | **1.91** | 1.97 | 2.04 | 1.95 | 1.99 | 2.06 | 2.13 | 2.02 | 2.06 | 2.13 | 2.21 |
| | | Amps | 6.4 | 6.5 | 6.7 | 6.9 | 6.8 | 7.0 | 7.2 | 7.5 | 7.4 | 7.6 | 7.8 | 8.1 | 7.9 | **8.0** | 8.3 | 8.6 | 8.3 | 8.5 | 8.8 | 9.1 | 8.8 | 9.0 | 9.3 | 9.6 |
| | | HI PR | 236 | 253 | 268 | 279 | 264 | 284 | 300 | 313 | 301 | 323 | 342 | 356 | 342 | **368** | 389 | 406 | 385 | 415 | 438 | 457 | 426 | 458 | 484 | 504 |
| | | LO PR | 111 | 118 | 129 | 137 | 117 | 125 | 136 | 145 | 122 | 129 | 141 | 151 | 128 | **136** | 149 | 158 | 134 | 143 | 156 | 166 | 139 | 147 | 161 | 171 |
| | 745 | MBh | 21.8 | 22.4 | 24.3 | 26.1 | 21.3 | 21.9 | 23.7 | 25.5 | 20.8 | 21.4 | 23.2 | 24.8 | 20.3 | 20.9 | 22.6 | 24.2 | 19.3 | 19.8 | 21.5 | 23.0 | 17.8 | 18.4 | 19.9 | 21.3 |
| | | S/T | 0.78 | 0.70 | 0.53 | 0.34 | 0.81 | 0.72 | 0.55 | 0.35 | 0.83 | 0.74 | 0.56 | 0.36 | 0.86 | 0.77 | 0.58 | 0.37 | 0.89 | 0.80 | 0.60 | 0.39 | 0.90 | 0.80 | 0.61 | 0.39 |
| | | ∆ T | 21 | 19 | 16 | 11 | 21 | 20 | 16 | 11 | 21 | 20 | 16 | 11 | 21 | 20 | 16 | 11 | 21 | 19 | 16 | 11 | 20 | 18 | 15 | 10 |
| | | kW | 1.50 | 1.53 | 1.58 | 1.63 | 1.62 | 1.65 | 1.71 | 1.77 | 1.72 | 1.76 | 1.82 | 1.88 | 1.82 | 1.86 | 1.92 | 1.99 | 1.90 | 1.94 | 2.01 | 2.08 | 1.96 | 2.01 | 2.08 | 2.15 |
| | | Amps | 6.2 | 6.3 | 6.5 | 6.8 | 6.7 | 6.8 | 7.0 | 7.3 | 7.2 | 7.4 | 7.6 | 7.9 | 7.7 | 7.8 | 8.1 | 8.4 | 8.1 | 8.3 | 8.6 | 8.9 | 8.6 | 8.8 | 9.1 | 9.4 |
| | | HI PR | 228 | 246 | 260 | 271 | 256 | 276 | 291 | 304 | 292 | 314 | 331 | 346 | 332 | 357 | 377 | 394 | 374 | 402 | 425 | 443 | 413 | 444 | 469 | 489 |
| | | LO PR | 108 | 114 | 125 | 133 | 114 | 121 | 132 | 141 | 118 | 126 | 137 | 146 | 124 | 132 | 144 | 153 | 130 | 138 | 151 | 161 | 134 | 143 | 156 | 166 |

IDB = Entering Indoor Dry Bulb Temperature — Shaded area reflects ACCA (TVA) conditions — KW = Total system power

High and low pressures are measured at the liquid and suction access fittings. — Amps: Unit amps (comp.+ evaporator + condenser fan motors)

Design Subcooling, 10 ±2 °F @ liquid access fitting connection AHRI 95 test conditions. Design Superheat 9 ±2°F @ compressor suction access fitting connection.

# EXPANDED COOLING DATA — GPH1424H41A (CONT.)

| | | | Outdoor Ambient Temperature | | | | | | | | | | | | | | | | | | | | | | | |
|---|---|---|---|---|---|---|---|---|---|---|---|---|---|---|---|---|---|---|---|---|---|---|---|---|---|---|
| | | | 65 | | | | 75 | | | | 85 | | | | 95 | | | | 105 | | | | 115 | | | |
| | | | Entering Indoor Wet Bulb Temperature | | | | | | | | | | | | | | | | | | | | | | | |
| IDB | Airflow | | 59 | 63 | 67 | 71 | 59 | 63 | 67 | 71 | 59 | 63 | 67 | 71 | 59 | 63 | 67 | 71 | 59 | 63 | 67 | 71 | 59 | 63 | 67 | 71 |
| 80 | 955 | MBh | 24.7 | 25.3 | 27.0 | 28.9 | 24.2 | 24.7 | 26.4 | 28.2 | 23.6 | 24.1 | 25.8 | 27.5 | 23.0 | 23.5 | 25.1 | 26.9 | 21.9 | 22.3 | 23.9 | 25.5 | 20.3 | 20.7 | 22.1 | 23.6 |
| | | S/T | 0.93 | 0.87 | 0.71 | 0.53 | 0.96 | 0.90 | 0.74 | 0.55 | 1.00 | 0.93 | 0.76 | 0.56 | 1.00 | 0.96 | 0.78 | 0.58 | 1.00 | 1.00 | 0.81 | 0.60 | 1.00 | 1.00 | 0.82 | 0.61 |
| | | ΔT | 22 | 21 | 18 | 15 | 22 | 22 | 19 | 15 | 23 | 22 | 19 | 15 | 22 | 22 | 19 | 15 | 21 | 22 | 19 | 15 | 19 | 20 | 17 | 14 |
| | | kW | 1.56 | 1.60 | 1.65 | 1.71 | 1.69 | 1.73 | 1.78 | 1.84 | 1.80 | 1.84 | 1.90 | 1.97 | 1.90 | 1.94 | 2.01 | 2.08 | 1.98 | 2.03 | 2.10 | 2.17 | 2.05 | 2.10 | 2.17 | 2.25 |
| | | Amps | 6.5 | 6.6 | 6.8 | 7.1 | 7.0 | 7.1 | 7.3 | 7.6 | 7.5 | 7.7 | 7.9 | 8.2 | 8.0 | 8.2 | 8.4 | 8.7 | 8.5 | 8.7 | 9.0 | 9.3 | 9.0 | 9.2 | 9.5 | 9.8 |
| | | HI PR | 240 | 259 | 273 | 285 | 270 | 290 | 306 | 320 | 307 | 330 | 349 | 363 | 349 | 376 | 397 | 414 | 393 | 423 | 447 | 466 | 434 | 467 | 493 | 515 |
| | | LO PR | 113 | 120 | 131 | 140 | 119 | 127 | 139 | 148 | 124 | 132 | 144 | 154 | 130 | 139 | 152 | 161 | 137 | 145 | 159 | 169 | 141 | 150 | 164 | 175 |
| | 850 | MBh | 24.0 | 24.6 | 26.2 | 28.0 | 23.5 | 24.0 | 25.6 | 27.4 | 22.9 | 23.4 | 25.0 | 26.7 | 22.4 | 22.8 | **24.4** | 26.1 | 21.2 | 21.7 | 23.2 | 24.8 | 19.7 | 20.1 | 21.5 | 23.0 |
| | | S/T | 0.89 | 0.83 | 0.68 | 0.51 | 0.92 | 0.86 | 0.70 | 0.53 | 0.94 | 0.89 | 0.72 | 0.54 | 0.97 | 0.91 | **0.74** | 0.56 | 1.00 | 0.95 | 0.77 | 0.58 | 1.00 | 0.96 | 0.78 | 0.58 |
| | | ΔT | 23 | 22 | 19 | 15 | 23 | 22 | 19 | 16 | 23 | 22 | 19 | 16 | 24 | 23 | **20** | 16 | 23 | 22 | 19 | 15 | 21 | 21 | 18 | 14 |
| | | kW | 1.55 | 1.58 | 1.64 | 1.69 | 1.67 | 1.71 | 1.77 | 1.83 | 1.78 | 1.82 | 1.89 | 1.95 | 1.88 | 1.92 | **1.99** | 2.06 | 1.96 | 2.01 | 2.08 | 2.15 | 2.03 | 2.08 | 2.15 | 2.23 |
| | | Amps | 6.4 | 6.6 | 6.8 | 7.0 | 6.9 | 7.1 | 7.3 | 7.5 | 7.5 | 7.6 | 7.9 | 8.1 | 7.9 | 8.1 | **8.4** | 8.7 | 8.4 | 8.6 | 8.9 | 9.2 | 8.9 | 9.1 | 9.4 | 9.7 |
| | | HI PR | 238 | 256 | 270 | 282 | 267 | 287 | 303 | 316 | 304 | 327 | 345 | 360 | 346 | 372 | **393** | 410 | 389 | 419 | 442 | 461 | 430 | 463 | 488 | 510 |
| | | LO PR | 112 | 119 | 130 | 139 | 118 | 126 | 137 | 146 | 123 | 131 | 143 | 152 | 129 | 137 | **150** | 160 | 135 | 144 | 157 | 167 | 140 | 149 | 163 | 173 |
| | 745 | MBh | 22.2 | 22.7 | 24.2 | 25.9 | 21.7 | 22.1 | 23.6 | 25.3 | 21.1 | 21.6 | 23.1 | 24.7 | 20.6 | 21.1 | 22.5 | 24.1 | 19.6 | 20.0 | 21.4 | 22.9 | 18.2 | 18.6 | 19.8 | 21.2 |
| | | S/T | 0.86 | 0.80 | 0.65 | 0.49 | 0.89 | 0.83 | 0.68 | 0.51 | 0.91 | 0.85 | 0.69 | 0.52 | 0.94 | 0.88 | 0.72 | 0.54 | 0.97 | 0.91 | 0.74 | 0.56 | 0.98 | 0.92 | 0.75 | 0.56 |
| | | ΔT | 23 | 22 | 20 | 16 | 24 | 23 | 20 | 16 | 24 | 23 | 20 | 16 | 24 | 23 | 20 | 16 | 24 | 23 | 20 | 16 | 22 | 21 | 18 | 15 |
| | | kW | 1.51 | 1.54 | 1.60 | 1.65 | 1.63 | 1.67 | 1.72 | 1.78 | 1.74 | 1.78 | 1.84 | 1.90 | 1.83 | 1.87 | 1.94 | 2.00 | 1.91 | 1.96 | 2.02 | 2.09 | 1.98 | 2.03 | 2.10 | 2.17 |
| | | Amps | 6.3 | 6.4 | 6.6 | 6.8 | 6.7 | 6.9 | 7.1 | 7.3 | 7.3 | 7.4 | 7.7 | 7.9 | 7.7 | 7.9 | 8.2 | 8.4 | 8.2 | 8.4 | 8.6 | 9.0 | 8.7 | 8.9 | 9.1 | 9.5 |
| | | HI PR | 231 | 248 | 262 | 274 | 259 | 279 | 294 | 307 | 295 | 317 | 335 | 349 | 335 | 361 | 381 | 398 | 377 | 406 | 429 | 447 | 417 | 449 | 474 | 494 |
| | | LO PR | 109 | 116 | 126 | 134 | 115 | 122 | 133 | 142 | 119 | 127 | 139 | 148 | 125 | 133 | 146 | 155 | 131 | 140 | 152 | 162 | 136 | 144 | 158 | 168 |
| 85 | 955 | MBh | 25.2 | 25.7 | 26.9 | 28.7 | 24.6 | 25.1 | 26.3 | 28.0 | 24.0 | 24.5 | 25.6 | 27.3 | 23.4 | 23.9 | 25.0 | 26.7 | 22.3 | 22.7 | 23.8 | 25.3 | 20.6 | 21.0 | 22.0 | 23.5 |
| | | S/T | 0.98 | 0.94 | 0.85 | 0.69 | 1.00 | 0.98 | 0.88 | 0.71 | 1.00 | 1.00 | 0.90 | 0.73 | 1.00 | 1.00 | 0.93 | 0.76 | 1.00 | 1.00 | 0.97 | 0.79 | 1.00 | 1.00 | 0.98 | 0.79 |
| | | ΔT | 24 | 23 | 22 | 19 | 24 | 24 | 22 | 19 | 23 | 24 | 22 | 19 | 23 | 23 | 22 | 19 | 21 | 22 | 22 | 19 | 20 | 20 | 21 | 18 |
| | | kW | 1.58 | 1.61 | 1.66 | 1.72 | 1.70 | 1.74 | 1.80 | 1.86 | 1.81 | 1.86 | 1.92 | 1.98 | 1.91 | 1.96 | 2.02 | 2.09 | 2.00 | 2.04 | 2.11 | 2.19 | 2.07 | 2.12 | 2.19 | 2.27 |
| | | Amps | 6.5 | 6.7 | 6.9 | 7.1 | 7.0 | 7.2 | 7.4 | 7.7 | 7.6 | 7.8 | 8.0 | 8.3 | 8.1 | 8.3 | 8.5 | 8.8 | 8.6 | 8.8 | 9.0 | 9.4 | 9.0 | 9.3 | 9.5 | 9.9 |
| | | HI PR | 243 | 261 | 276 | 288 | 272 | 293 | 309 | 323 | 310 | 333 | 352 | 367 | 353 | 380 | 401 | 418 | 397 | 427 | 451 | 470 | 439 | 472 | 498 | 520 |
| | | LO PR | 114 | 122 | 133 | 141 | 121 | 128 | 140 | 149 | 125 | 133 | 146 | 155 | 132 | 140 | 153 | 163 | 138 | 147 | 160 | 171 | 143 | 152 | 166 | 177 |
| | 850 | MBh | 24.4 | 24.9 | 26.1 | 27.8 | 23.9 | 24.3 | 25.5 | 27.2 | 23.3 | 23.8 | 24.9 | 26.5 | 22.7 | 23.2 | 24.3 | 25.9 | 21.6 | 22.0 | 23.1 | 24.6 | 20.0 | 20.4 | 21.4 | 22.8 |
| | | S/T | 0.93 | 0.90 | 0.81 | 0.66 | 0.96 | 0.93 | 0.84 | 0.68 | 0.99 | 0.95 | 0.86 | 0.70 | 1.00 | 0.99 | 0.89 | 0.72 | 1.00 | 1.00 | 0.92 | 0.75 | 1.00 | 1.00 | 0.93 | 0.76 |
| | | ΔT | 25 | 24 | 23 | 20 | 25 | 25 | 23 | 20 | 25 | 25 | 23 | 20 | 25 | 25 | 23 | 20 | 23 | 24 | 23 | 20 | 22 | 22 | 22 | 19 |
| | | kW | 1.56 | 1.60 | 1.65 | 1.71 | 1.69 | 1.73 | 1.78 | 1.84 | 1.80 | 1.84 | 1.90 | 1.97 | 1.90 | 1.94 | 2.01 | 2.08 | 1.98 | 2.03 | 2.10 | 2.17 | 2.05 | 2.10 | 2.17 | 2.25 |
| | | Amps | 6.5 | 6.6 | 6.8 | 7.1 | 7.0 | 7.1 | 7.3 | 7.6 | 7.5 | 7.7 | 7.9 | 8.2 | 8.0 | 8.2 | 8.4 | 8.7 | 8.5 | 8.7 | 9.0 | 9.3 | 9.0 | 9.2 | 9.5 | 9.8 |
| | | HI PR | 240 | 259 | 273 | 285 | 270 | 290 | 306 | 320 | 307 | 330 | 349 | 363 | 349 | 376 | 397 | 414 | 393 | 423 | 447 | 466 | 434 | 467 | 493 | 515 |
| | | LO PR | 113 | 120 | 131 | 140 | 119 | 127 | 139 | 148 | 124 | 132 | 144 | 154 | 130 | 139 | 152 | 161 | 137 | 145 | 159 | 169 | 141 | 150 | 164 | 175 |
| | 745 | MBh | 22.6 | 23.0 | 24.1 | 25.7 | 22.0 | 22.5 | 23.5 | 25.1 | 21.5 | 21.9 | 23.0 | 24.5 | 21.0 | 21.4 | 22.4 | 23.9 | 19.9 | 20.3 | 21.3 | 22.7 | 18.5 | 18.8 | 19.7 | 21.0 |
| | | S/T | 0.90 | 0.87 | 0.78 | 0.63 | 0.93 | 0.90 | 0.81 | 0.66 | 0.95 | 0.92 | 0.83 | 0.67 | 0.98 | 0.95 | 0.86 | 0.70 | 1.00 | 0.99 | 0.89 | 0.72 | 1.00 | 0.99 | 0.90 | 0.73 |
| | | ΔT | 25 | 25 | 23 | 20 | 25 | 25 | 24 | 20 | 25 | 25 | 24 | 20 | 26 | 25 | 24 | 21 | 25 | 25 | 23 | 20 | 23 | 23 | 22 | 19 |
| | | kW | 1.52 | 1.56 | 1.61 | 1.66 | 1.65 | 1.68 | 1.74 | 1.80 | 1.75 | 1.79 | 1.85 | 1.92 | 1.85 | 1.89 | 1.95 | 2.02 | 1.93 | 1.97 | 2.04 | 2.11 | 2.00 | 2.04 | 2.11 | 2.19 |
| | | Amps | 6.3 | 6.5 | 6.6 | 6.9 | 6.8 | 6.9 | 7.1 | 7.4 | 7.3 | 7.5 | 7.7 | 8.0 | 7.8 | 8.0 | 8.2 | 8.5 | 8.3 | 8.5 | 8.7 | 9.0 | 8.7 | 8.9 | 9.2 | 9.5 |
| | | HI PR | 233 | 251 | 265 | 276 | 262 | 281 | 297 | 310 | 297 | 320 | 338 | 353 | 339 | 365 | 385 | 402 | 381 | 410 | 433 | 452 | 421 | 453 | 479 | 499 |
| | | LO PR | 110 | 117 | 127 | 136 | 116 | 123 | 135 | 143 | 120 | 128 | 140 | 149 | 127 | 135 | 147 | 157 | 133 | 141 | 154 | 164 | 137 | 146 | 159 | 170 |

IDB = Entering Indoor Dry Bulb Temperature — Shaded area reflects AHRI (TVA) conditions — KW = Total system power

High and low pressures are measured at the liquid and suction access fittings. — Amps: Unit amps (comp.+ evaporator + condenser fan motors)

Design Subcooling, 10 ±2 °F @ liquid access fitting connection AHRI 95 test conditions. Design Superheat 9 ±2°F @ compressor suction access fitting connection.

# EXPANDED COOLING DATA — GPH1430H41A

| | | | Outdoor Ambient Temperature | | | | | | | | | | | | | | | | | | | | | | | |
|---|---|---|---|---|---|---|---|---|---|---|---|---|---|---|---|---|---|---|---|---|---|---|---|---|---|---|
| | | | 65 | | | | 75 | | | | 85 | | | | 95 | | | | 105 | | | | 115 | | | |
| | | | Entering Indoor Wet Bulb Temperature | | | | | | | | | | | | | | | | | | | | | | | |
| IDB | Airflow | | 59 | 63 | 67 | 71 | 59 | 63 | 67 | 71 | 59 | 63 | 67 | 71 | 59 | 63 | 67 | 71 | 59 | 63 | 67 | 71 | 59 | 63 | 67 | 71 |
| 70 | 1180 | MBh | 29.0 | 30.1 | 32.9 | - | 28.3 | 29.4 | 32.2 | - | 27.7 | 28.7 | 31.4 | - | 27.0 | 28.0 | 30.6 | - | 25.6 | 26.6 | 29.1 | - | 23.7 | 24.6 | 27.0 | - |
| | | S/T | 0.80 | 0.67 | 0.46 | - | 0.83 | 0.69 | 0.48 | - | 0.85 | 0.71 | 0.49 | - | 0.87 | 0.73 | 0.51 | - | 0.91 | 0.76 | 0.53 | - | 0.92 | 0.76 | 0.53 | - |
| | | ΔT | 18 | 16 | 12 | - | 18 | 16 | 12 | - | 18 | 16 | 12 | - | 18 | 16 | 12 | - | 18 | 16 | 12 | - | 17 | 15 | 11 | - |
| | | kW | 1.88 | 1.92 | 1.98 | - | 2.03 | 2.07 | 2.14 | - | 2.16 | 2.21 | 2.28 | - | 2.27 | 2.32 | 2.40 | - | 2.37 | 2.42 | 2.51 | - | 2.46 | 2.51 | 2.60 | - |
| | | Amps | 7.8 | 8.0 | 8.2 | - | 8.4 | 8.6 | 8.8 | - | 9.1 | 9.3 | 9.6 | - | 9.6 | 9.9 | 10.2 | - | 10.2 | 10.5 | 10.8 | - | 10.8 | 11.0 | 11.4 | - |
| | | HI PR | 242 | 261 | 275 | - | 272 | 292 | 309 | - | 309 | 332 | 351 | - | 352 | 379 | 400 | - | 396 | 426 | 450 | - | 437 | 471 | 497 | - |
| | | LO PR | 116 | 123 | 135 | - | 123 | 130 | 142 | - | 127 | 136 | 148 | - | 134 | 142 | 155 | - | 140 | 149 | 163 | - | 145 | 154 | 168 | - |
| | 1050 | MBh | 28.2 | 29.2 | 32.0 | - | 27.5 | 28.5 | 31.2 | - | 26.9 | 27.8 | 30.5 | - | 26.2 | 27.2 | 29.7 | - | 24.9 | 25.8 | 28.3 | - | 23.1 | 23.9 | 26.2 | - |
| | | S/T | 0.76 | 0.63 | 0.44 | - | 0.79 | 0.66 | 0.46 | - | 0.81 | 0.67 | 0.47 | - | 0.83 | 0.70 | 0.48 | - | 0.87 | 0.72 | 0.50 | - | 0.87 | 0.73 | 0.50 | - |
| | | ΔT | 19 | 16 | 12 | - | 19 | 16 | 12 | - | 19 | 16 | 12 | - | 19 | 17 | 13 | - | 19 | 16 | 12 | - | 18 | 15 | 12 | - |
| | | kW | 1.87 | 1.91 | 1.97 | - | 2.01 | 2.06 | 2.12 | - | 2.14 | 2.19 | 2.26 | - | 2.25 | 2.30 | 2.38 | - | 2.35 | 2.40 | 2.48 | - | 2.43 | 2.49 | 2.57 | - |
| | | Amps | 7.8 | 7.9 | 8.2 | - | 8.3 | 8.5 | 8.8 | - | 9.0 | 9.2 | 9.5 | - | 9.6 | 9.8 | 10.1 | - | 10.1 | 10.4 | 10.7 | - | 10.7 | 10.9 | 11.3 | - |
| | | HI PR | 240 | 258 | 272 | - | 269 | 289 | 306 | - | 306 | 329 | 348 | - | 348 | 375 | 396 | - | 392 | 422 | 445 | - | 433 | 466 | 492 | - |
| | | LO PR | 115 | 122 | 133 | - | 121 | 129 | 141 | - | 126 | 134 | 146 | - | 132 | 141 | 154 | - | 139 | 148 | 161 | - | 144 | 153 | 167 | - |
| | 920 | MBh | 26.0 | 26.9 | 29.5 | - | 25.4 | 26.3 | 28.8 | - | 24.8 | 25.7 | 28.1 | - | 24.2 | 25.1 | 27.5 | - | 23.0 | 23.8 | 26.1 | - | 21.3 | 22.1 | 24.2 | - |
| | | S/T | 0.73 | 0.61 | 0.42 | - | 0.76 | 0.63 | 0.44 | - | 0.78 | 0.65 | 0.45 | - | 0.80 | 0.67 | 0.47 | - | 0.83 | 0.70 | 0.48 | - | 0.84 | 0.70 | 0.49 | - |
| | | ΔT | 19 | 16 | 13 | - | 19 | 17 | 13 | - | 19 | 17 | 13 | - | 19 | 17 | 13 | - | 19 | 17 | 13 | - | 18 | 15 | 12 | - |
| | | kW | 1.82 | 1.86 | 1.92 | - | 1.96 | 2.00 | 2.07 | - | 2.09 | 2.13 | 2.20 | - | 2.20 | 2.25 | 2.32 | - | 2.29 | 2.34 | 2.42 | - | 2.37 | 2.43 | 2.51 | - |
| | | Amps | 7.6 | 7.7 | 8.0 | - | 8.1 | 8.3 | 8.6 | - | 8.8 | 9.0 | 9.2 | - | 9.3 | 9.5 | 9.8 | - | 9.9 | 10.1 | 10.4 | - | 10.4 | 10.7 | 11.0 | - |
| | | HI PR | 233 | 250 | 264 | - | 261 | 281 | 296 | - | 297 | 319 | 337 | - | 338 | 364 | 384 | - | 380 | 409 | 432 | - | 420 | 452 | 477 | - |
| | | LO PR | 111 | 119 | 129 | - | 118 | 125 | 137 | - | 122 | 130 | 142 | - | 128 | 137 | 149 | - | 135 | 143 | 156 | - | 139 | 148 | 162 | - |
| 75 | 1180 | MBh | 29.5 | 30.4 | 32.9 | 35.3 | 28.8 | 29.7 | 32.1 | 34.5 | 28.1 | 29.0 | 31.3 | 33.6 | 27.4 | 28.3 | 30.6 | 32.8 | 26.1 | 26.8 | 29.1 | 31.2 | 24.1 | 24.9 | 26.9 | 28.9 |
| | | S/T | 0.91 | 0.81 | 0.61 | 0.39 | 0.94 | 0.84 | 0.64 | 0.41 | 0.96 | 0.86 | 0.65 | 0.42 | 0.99 | 0.89 | 0.67 | 0.43 | 1.00 | 0.92 | 0.70 | 0.45 | 1.00 | 0.93 | 0.70 | 0.45 |
| | | ΔT | 21 | 19 | 16 | 11 | 21 | 19 | 16 | 11 | 21 | 19 | 16 | 11 | 21 | 20 | 16 | 11 | 20 | 19 | 16 | 11 | 19 | 18 | 15 | 10 |
| | | kW | 1.90 | 1.94 | 2.00 | 2.07 | 2.05 | 2.09 | 2.16 | 2.23 | 2.18 | 2.23 | 2.30 | 2.38 | 2.29 | 2.34 | 2.42 | 2.51 | 2.39 | 2.45 | 2.53 | 2.61 | 2.48 | 2.53 | 2.62 | 2.71 |
| | | Amps | 7.9 | 8.1 | 8.3 | 8.6 | 8.5 | 8.7 | 8.9 | 9.2 | 9.1 | 9.4 | 9.6 | 10.0 | 9.7 | 9.9 | 10.3 | 10.6 | 10.3 | 10.5 | 10.9 | 11.3 | 10.9 | 11.1 | 11.5 | 11.9 |
| | | HI PR | 245 | 263 | 278 | 290 | 274 | 295 | 312 | 325 | 312 | 336 | 355 | 370 | 355 | 383 | 404 | 421 | 400 | 430 | 454 | 474 | 442 | 476 | 502 | 524 |
| | | LO PR | 117 | 125 | 136 | 145 | 124 | 132 | 144 | 153 | 129 | 137 | 149 | 159 | 135 | 144 | 157 | 167 | 142 | 151 | 165 | 175 | 147 | 156 | 170 | 181 |
| | 1050 | MBh | 28.6 | 29.5 | 31.9 | 34.3 | 28.0 | 28.8 | 31.2 | 33.5 | 27.3 | 28.1 | 30.4 | 32.7 | 26.6 | **27.4** | 29.7 | 31.9 | 25.3 | 26.1 | 28.2 | 30.3 | 23.4 | 24.1 | 26.1 | 28.0 |
| | | S/T | 0.86 | 0.77 | 0.58 | 0.38 | 0.90 | 0.80 | 0.61 | 0.39 | 0.92 | 0.82 | 0.62 | 0.40 | 0.95 | **0.85** | 0.64 | 0.41 | 0.98 | 0.88 | 0.67 | 0.43 | 0.99 | 0.89 | 0.67 | 0.43 |
| | | ΔT | 22 | 20 | 16 | 11 | 22 | 20 | 17 | 11 | 22 | 20 | 17 | 11 | 22 | **20** | 17 | 12 | 22 | 20 | 16 | 11 | 20 | 19 | 15 | 11 |
| | | kW | 1.88 | 1.92 | 1.98 | 2.05 | 2.03 | 2.07 | 2.14 | 2.21 | 2.16 | 2.21 | 2.28 | 2.36 | 2.27 | **2.32** | 2.40 | 2.48 | 2.37 | 2.42 | 2.51 | 2.59 | 2.46 | 2.51 | 2.60 | 2.69 |
| | | Amps | 7.8 | 8.0 | 8.2 | 8.5 | 8.4 | 8.6 | 8.9 | 9.2 | 9.1 | 9.3 | 9.6 | 9.9 | 9.6 | **9.9** | 10.2 | 10.5 | 10.2 | 10.5 | 10.8 | 11.2 | 10.8 | 11.0 | 11.4 | 11.8 |
| | | HI PR | 242 | 261 | 275 | 287 | 272 | 292 | 309 | 322 | 309 | 333 | 351 | 366 | 352 | **379** | 400 | 417 | 396 | 426 | 450 | 469 | 437 | 471 | 497 | 519 |
| | | LO PR | 116 | 123 | 135 | 144 | 123 | 130 | 142 | 152 | 127 | 136 | 148 | 158 | 134 | **142** | 155 | 166 | 140 | 149 | 163 | 173 | 145 | 154 | 168 | 179 |
| | 920 | MBh | 26.4 | 27.2 | 29.5 | 31.6 | 25.8 | 26.6 | 28.8 | 30.9 | 25.2 | 25.9 | 28.1 | 30.1 | 24.6 | 25.3 | 27.4 | 29.4 | 23.4 | 24.1 | 26.0 | 27.9 | 21.6 | 22.3 | 24.1 | 25.9 |
| | | S/T | 0.83 | 0.75 | 0.56 | 0.36 | 0.86 | 0.77 | 0.58 | 0.38 | 0.89 | 0.79 | 0.60 | 0.39 | 0.91 | 0.82 | 0.62 | 0.40 | 0.95 | 0.85 | 0.64 | 0.41 | 0.96 | 0.86 | 0.65 | 0.42 |
| | | ΔT | 22 | 20 | 17 | 11 | 22 | 21 | 17 | 12 | 22 | 21 | 17 | 12 | 22 | 21 | 17 | 12 | 22 | 20 | 17 | 12 | 21 | 19 | 16 | 11 |
| | | kW | 1.84 | 1.87 | 1.93 | 2.00 | 1.98 | 2.02 | 2.09 | 2.16 | 2.10 | 2.15 | 2.22 | 2.30 | 2.22 | 2.27 | 2.34 | 2.42 | 2.31 | 2.36 | 2.44 | 2.53 | 2.39 | 2.45 | 2.53 | 2.62 |
| | | Amps | 7.6 | 7.8 | 8.0 | 8.3 | 8.2 | 8.4 | 8.6 | 8.9 | 8.8 | 9.0 | 9.3 | 9.6 | 9.4 | 9.6 | 9.9 | 10.3 | 10.0 | 10.2 | 10.5 | 10.9 | 10.5 | 10.8 | 11.1 | 11.5 |
| | | HI PR | 235 | 253 | 267 | 278 | 264 | 284 | 300 | 312 | 300 | 323 | 341 | 355 | 341 | 367 | 388 | 405 | 384 | 413 | 436 | 455 | 424 | 457 | 482 | 503 |
| | | LO PR | 113 | 120 | 131 | 139 | 119 | 127 | 138 | 147 | 124 | 131 | 144 | 153 | 130 | 138 | 151 | 161 | 136 | 145 | 158 | 168 | 141 | 150 | 163 | 174 |

IDB = Entering Indoor Dry Bulb Temperature — Shaded area reflects ACCA (TVA) conditions — KW = Total system power

High and low pressures are measured at the liquid and suction access fittings. — Amps: Unit amps (comp.+ evaporator + condenser fan motors)

Design Subcooling, 10 ±2 °F @ liquid access fitting connection AHRI 95 test conditions. Design Superheat 9 ±2°F @ compressor suction access fitting connection.

# EXPANDED COOLING DATA — GPH1430H41A (CONT.)

| | | | Outdoor Ambient Temperature | | | | | | | | | | | | | | | | | | | | | | | |
|---|---|---|---|---|---|---|---|---|---|---|---|---|---|---|---|---|---|---|---|---|---|---|---|---|---|---|
| | | | 65 | | | | 75 | | | | 85 | | | | 95 | | | | 105 | | | | 115 | | | |
| | | | Entering Indoor Wet Bulb Temperature | | | | | | | | | | | | | | | | | | | | | | | |
| IDB | Airflow | | 59 | 63 | 67 | 71 | 59 | 63 | 67 | 71 | 59 | 63 | 67 | 71 | 59 | 63 | 67 | 71 | 59 | 63 | 67 | 71 | 59 | 63 | 67 | 71 |
| 80 | 1180 | MBh | 30.0 | 30.7 | 32.8 | 35.0 | 29.3 | 30.0 | 32.0 | 34.2 | 28.6 | 29.3 | 31.3 | 33.4 | 27.9 | 28.5 | 30.5 | 32.6 | 26.5 | 27.1 | 29.0 | 31.0 | 24.6 | 25.1 | 26.8 | 28.7 |
| | | S/T | 1.00 | 0.93 | 0.76 | 0.57 | 1.00 | 0.97 | 0.79 | 0.59 | 1.00 | 1.00 | 0.81 | 0.60 | 1.00 | 1.00 | 0.83 | 0.62 | 1.00 | 1.00 | 0.86 | 0.65 | 1.00 | 1.00 | 0.87 | 0.65 |
| | | ΔT | 23 | 22 | 19 | 15 | 23 | 23 | 20 | 16 | 22 | 23 | 20 | 16 | 22 | 22 | 20 | 16 | 21 | 21 | 19 | 16 | 19 | 20 | 18 | 15 |
| | | kW | 1.91 | 1.95 | 2.02 | 2.08 | 2.06 | 2.11 | 2.18 | 2.25 | 2.19 | 2.24 | 2.32 | 2.40 | 2.31 | 2.36 | 2.44 | 2.53 | 2.41 | 2.47 | 2.55 | 2.64 | 2.50 | 2.56 | 2.64 | 2.73 |
| | | Amps | 8.0 | 8.1 | 8.4 | 8.7 | 8.5 | 8.7 | 9.0 | 9.3 | 9.2 | 9.4 | 9.7 | 10.1 | 9.8 | 10.0 | 10.3 | 10.7 | 10.4 | 10.6 | 11.0 | 11.4 | 11.0 | 11.2 | 11.6 | 12.0 |
| | | HI PR | 247 | 266 | 281 | 293 | 277 | 298 | 315 | 329 | 315 | 339 | 358 | 374 | 359 | 386 | 408 | 426 | 404 | 435 | 459 | 479 | 446 | 480 | 507 | 529 |
| | | LO PR | 118 | 126 | 137 | 146 | 125 | 133 | 145 | 155 | 130 | 138 | 151 | 161 | 137 | 145 | 159 | 169 | 143 | 152 | 166 | 177 | 148 | 157 | 172 | 183 |
| | 1050 | MBh | 29.1 | 29.8 | 31.8 | 34.0 | 28.5 | 29.1 | 31.1 | 33.2 | 27.8 | 28.4 | 30.3 | 32.4 | 27.1 | 27.7 | **29.6** | 31.6 | 25.8 | 26.3 | 28.1 | 30.1 | 23.9 | 24.4 | 26.0 | 27.8 |
| | | S/T | 0.95 | 0.89 | 0.72 | 0.54 | 0.98 | 0.92 | 0.75 | 0.56 | 1.00 | 0.94 | 0.77 | 0.57 | 1.00 | 0.98 | **0.79** | 0.59 | 1.00 | 1.00 | 0.82 | 0.62 | 1.00 | 1.00 | 0.83 | 0.62 |
| | | ΔT | 24 | 23 | 20 | 16 | 24 | 23 | 20 | 16 | 24 | 23 | 20 | 16 | 24 | 24 | **21** | 16 | 23 | 23 | 20 | 16 | 21 | 21 | 19 | 15 |
| | | kW | 1.90 | 1.94 | 2.00 | 2.07 | 2.05 | 2.09 | 2.16 | 2.23 | 2.18 | 2.23 | 2.30 | 2.38 | 2.29 | 2.34 | **2.42** | 2.51 | 2.39 | 2.45 | 2.53 | 2.62 | 2.48 | 2.53 | 2.62 | 2.71 |
| | | Amps | 7.9 | 8.1 | 8.3 | 8.6 | 8.5 | 8.7 | 8.9 | 9.2 | 9.1 | 9.4 | 9.6 | 10.0 | 9.7 | 10.0 | **10.3** | 10.6 | 10.3 | 10.5 | 10.9 | 11.3 | 10.9 | 11.1 | 11.5 | 11.9 |
| | | HI PR | 245 | 263 | 278 | 290 | 274 | 295 | 312 | 325 | 312 | 336 | 355 | 370 | 356 | 383 | **404** | 421 | 400 | 430 | 455 | 474 | 442 | 476 | 502 | 524 |
| | | LO PR | 117 | 125 | 136 | 145 | 124 | 132 | 144 | 153 | 129 | 137 | 149 | 159 | 135 | 144 | **157** | 167 | 142 | 151 | 165 | 175 | 147 | 156 | 170 | 181 |
| | 920 | MBh | 26.9 | 27.5 | 29.4 | 31.4 | 26.3 | 26.9 | 28.7 | 30.7 | 25.7 | 26.2 | 28.0 | 29.9 | 25.0 | 25.6 | 27.3 | 29.2 | 23.8 | 24.3 | 26.0 | 27.7 | 22.0 | 22.5 | 24.0 | 25.7 |
| | | S/T | 0.91 | 0.86 | 0.70 | 0.52 | 0.95 | 0.89 | 0.72 | 0.54 | 0.97 | 0.91 | 0.74 | 0.55 | 1.00 | 0.94 | 0.77 | 0.57 | 1.04 | 0.98 | 0.79 | 0.59 | 1.05 | 0.98 | 0.80 | 0.60 |
| | | ΔT | 25 | 24 | 20 | 16 | 25 | 24 | 21 | 17 | 25 | 24 | 21 | 17 | 25 | 24 | 21 | 17 | 25 | 24 | 21 | 16 | 23 | 22 | 19 | 15 |
| | | kW | 1.85 | 1.89 | 1.95 | 2.01 | 1.99 | 2.04 | 2.10 | 2.17 | 2.12 | 2.17 | 2.24 | 2.32 | 2.23 | 2.28 | 2.36 | 2.44 | 2.33 | 2.38 | 2.46 | 2.55 | 2.41 | 2.47 | 2.55 | 2.64 |
| | | Amps | 7.7 | 7.9 | 8.1 | 8.4 | 8.3 | 8.4 | 8.7 | 9.0 | 8.9 | 9.1 | 9.4 | 9.7 | 9.5 | 9.7 | 10.0 | 10.3 | 10.0 | 10.3 | 10.6 | 11.0 | 10.6 | 10.8 | 11.2 | 11.6 |
| | | HI PR | 237 | 255 | 270 | 281 | 266 | 286 | 303 | 316 | 303 | 326 | 344 | 359 | 345 | 371 | 392 | 409 | 388 | 417 | 441 | 460 | 429 | 461 | 487 | 508 |
| | | LO PR | 114 | 121 | 132 | 141 | 120 | 128 | 139 | 149 | 125 | 133 | 145 | 154 | 131 | 139 | 152 | 162 | 137 | 146 | 160 | 170 | 142 | 151 | 165 | 176 |
| 85 | 1180 | MBh | 30.5 | 31.1 | 32.6 | 34.8 | 29.8 | 30.4 | 31.9 | 34.0 | 29.1 | 29.7 | 31.1 | 33.2 | 28.4 | 29.0 | 30.3 | 32.4 | 27.0 | 27.5 | 28.8 | 30.7 | 25.0 | 25.5 | 26.7 | 28.5 |
| | | S/T | 1.00 | 1.00 | 0.91 | 0.74 | 1.00 | 1.00 | 0.94 | 0.76 | 1.00 | 1.00 | 0.96 | 0.78 | 1.00 | 1.00 | 1.00 | 0.81 | 1.00 | 1.00 | 1.00 | 0.84 | 1.00 | 1.00 | 1.00 | 0.85 |
| | | ΔT | 24 | 24 | 23 | 20 | 23 | 24 | 23 | 20 | 23 | 23 | 23 | 20 | 22 | 23 | 24 | 20 | 21 | 21 | 22 | 20 | 19 | 20 | 21 | 19 |
| | | kW | 1.93 | 1.97 | 2.03 | 2.10 | 2.08 | 2.13 | 2.19 | 2.27 | 2.21 | 2.26 | 2.34 | 2.42 | 2.33 | 2.38 | 2.46 | 2.55 | 2.43 | 2.49 | 2.57 | 2.66 | 2.52 | 2.58 | 2.66 | 2.76 |
| | | Amps | 8.0 | 8.2 | 8.4 | 8.7 | 8.6 | 8.8 | 9.1 | 9.4 | 9.3 | 9.5 | 9.8 | 10.2 | 9.9 | 10.1 | 10.4 | 10.8 | 10.5 | 10.7 | 11.1 | 11.5 | 11.1 | 11.3 | 11.7 | 12.1 |
| | | HI PR | 250 | 269 | 284 | 296 | 280 | 301 | 318 | 332 | 318 | 343 | 362 | 377 | 363 | 390 | 412 | 430 | 408 | 439 | 464 | 484 | 451 | 485 | 512 | 534 |
| | | LO PR | 120 | 127 | 139 | 148 | 126 | 134 | 147 | 156 | 131 | 140 | 152 | 162 | 138 | 147 | 160 | 171 | 145 | 154 | 168 | 179 | 149 | 159 | 174 | 185 |
| | 1050 | MBh | 29.7 | 30.2 | 31.7 | 33.8 | 29.0 | 29.5 | 30.9 | 33.0 | 28.3 | 28.8 | 30.2 | 32.2 | 27.6 | 28.1 | 29.5 | 31.4 | 26.2 | 26.7 | 28.0 | 29.8 | 24.3 | 24.7 | 25.9 | 27.7 |
| | | S/T | 0.99 | 0.96 | 0.87 | 0.70 | 1.00 | 0.99 | 0.90 | 0.73 | 1.00 | 1.00 | 0.92 | 0.75 | 1.00 | 1.00 | 0.95 | 0.77 | 1.00 | 1.00 | 0.99 | 0.80 | 1.00 | 1.00 | 0.99 | 0.81 |
| | | ΔT | 26 | 25 | 24 | 21 | 25 | 26 | 24 | 21 | 25 | 25 | 24 | 21 | 24 | 25 | 24 | 21 | 23 | 23 | 24 | 21 | 21 | 22 | 23 | 20 |
| | | kW | 1.91 | 1.95 | 2.02 | 2.08 | 2.06 | 2.11 | 2.18 | 2.25 | 2.19 | 2.24 | 2.32 | 2.40 | 2.31 | 2.36 | 2.44 | 2.53 | 2.41 | 2.47 | 2.55 | 2.64 | 2.50 | 2.56 | 2.64 | 2.73 |
| | | Amps | 8.0 | 8.1 | 8.4 | 8.7 | 8.5 | 8.7 | 9.0 | 9.3 | 9.2 | 9.4 | 9.7 | 10.1 | 9.8 | 10.0 | 10.3 | 10.7 | 10.4 | 10.6 | 11.0 | 11.4 | 11.0 | 11.2 | 11.6 | 12.0 |
| | | HI PR | 247 | 266 | 281 | 293 | 277 | 298 | 315 | 329 | 315 | 339 | 358 | 374 | 359 | 386 | 408 | 426 | 404 | 435 | 459 | 479 | 446 | 480 | 507 | 529 |
| | | LO PR | 118 | 126 | 137 | 146 | 125 | 133 | 145 | 155 | 130 | 138 | 151 | 161 | 137 | 145 | 159 | 169 | 143 | 152 | 166 | 177 | 148 | 157 | 172 | 183 |
| | 920 | MBh | 27.4 | 27.9 | 29.2 | 31.2 | 26.7 | 27.3 | 28.5 | 30.5 | 26.1 | 26.6 | 27.9 | 29.7 | 25.5 | 26.0 | 27.2 | 29.0 | 24.2 | 24.7 | 25.8 | 27.6 | 22.4 | 22.8 | 23.9 | 25.5 |
| | | S/T | 0.96 | 0.92 | 0.83 | 0.68 | 0.99 | 0.96 | 0.86 | 0.70 | 1.00 | 0.98 | 0.89 | 0.72 | 1.00 | 1.00 | 0.92 | 0.74 | 1.00 | 1.00 | 0.95 | 0.77 | 1.00 | 1.00 | 0.96 | 0.78 |
| | | ΔT | 26 | 26 | 24 | 21 | 27 | 26 | 25 | 21 | 26 | 26 | 25 | 21 | 25 | 26 | 25 | 22 | 24 | 25 | 25 | 21 | 22 | 23 | 23 | 20 |
| | | kW | 1.87 | 1.91 | 1.97 | 2.03 | 2.01 | 2.06 | 2.12 | 2.19 | 2.14 | 2.19 | 2.26 | 2.34 | 2.25 | 2.30 | 2.38 | 2.46 | 2.35 | 2.40 | 2.48 | 2.57 | 2.43 | 2.49 | 2.57 | 2.66 |
| | | Amps | 7.8 | 7.9 | 8.2 | 8.4 | 8.3 | 8.5 | 8.8 | 9.1 | 9.0 | 9.2 | 9.5 | 9.8 | 9.6 | 9.8 | 10.1 | 10.4 | 10.1 | 10.4 | 10.7 | 11.1 | 10.7 | 10.9 | 11.3 | 11.7 |
| | | HI PR | 240 | 258 | 272 | 284 | 269 | 289 | 306 | 319 | 306 | 329 | 348 | 362 | 348 | 375 | 396 | 413 | 392 | 422 | 445 | 464 | 433 | 466 | 492 | 513 |
| | | LO PR | 115 | 122 | 133 | 142 | 121 | 129 | 141 | 150 | 126 | 134 | 146 | 156 | 132 | 141 | 154 | 164 | 139 | 148 | 161 | 172 | 144 | 153 | 167 | 178 |

IDB = Entering Indoor Dry Bulb Temperature

Shaded area reflects AHRI (TVA) conditions

KW = Total system power

High and low pressures are measured at the liquid and suction access fittings.

Amps: Unit amps (comp.+ evaporator + condenser fan motors)

Design Subcooling, 10 ±2 °F @ liquid access fitting connection AHRI 95 test conditions. Design Superheat 9 ±2°F @ compressor suction access fitting connection.

# EXPANDED COOLING DATA — GPH1436H41A

| | | | Outdoor Ambient Temperature | | | | | | | | | | | | | | | | | | | | | | | |
|---|---|---|---|---|---|---|---|---|---|---|---|---|---|---|---|---|---|---|---|---|---|---|---|---|---|---|
| | | | 65 | | | | 75 | | | | 85 | | | | 95 | | | | 105 | | | | 115 | | | |
| | | | Entering Indoor Wet Bulb Temperature | | | | | | | | | | | | | | | | | | | | | | | |
| IDB | Airflow | | 59 | 63 | 67 | 71 | 59 | 63 | 67 | 71 | 59 | 63 | 67 | 71 | 59 | 63 | 67 | 71 | 59 | 63 | 67 | 71 | 59 | 63 | 67 | 71 |
| 70 | 1350 | MBh | 35.3 | 36.6 | 40.1 | - | 34.5 | 35.7 | 39.1 | - | 33.6 | 34.9 | 38.2 | - | 32.8 | 34.0 | 37.3 | - | 31.2 | 32.3 | 35.4 | - | 28.9 | 29.9 | 32.8 | - |
| | | S/T | 0.76 | 0.64 | 0.44 | - | 0.79 | 0.66 | 0.46 | - | 0.81 | 0.68 | 0.47 | - | 0.84 | 0.70 | 0.48 | - | 0.87 | 0.73 | 0.50 | - | 0.88 | 0.73 | 0.51 | - |
| | | ΔT | 18 | 16 | 12 | - | 19 | 16 | 12 | - | 19 | 16 | 12 | - | 19 | 16 | 12 | - | 18 | 16 | 12 | - | 17 | 15 | 11 | - |
| | | kW | 2.37 | 2.42 | 2.50 | - | 2.56 | 2.61 | 2.70 | - | 2.72 | 2.78 | 2.87 | - | 2.86 | 2.93 | 3.02 | - | 2.99 | 3.05 | 3.16 | - | 3.09 | 3.16 | 3.27 | - |
| | | Amps | 9.9 | 10.1 | 10.4 | - | 10.7 | 10.9 | 11.2 | - | 11.5 | 11.7 | 12.1 | - | 12.2 | 12.5 | 12.9 | - | 12.9 | 13.2 | 13.6 | - | 13.6 | 14.0 | 14.4 | - |
| | | HI PR | 246 | 265 | 280 | - | 277 | 298 | 314 | - | 315 | 338 | 357 | - | 358 | 386 | 407 | - | 403 | 434 | 458 | - | 445 | 479 | 506 | - |
| | | LO PR | 112 | 120 | 131 | - | 119 | 126 | 138 | - | 123 | 131 | 143 | - | 130 | 138 | 151 | - | 136 | 145 | 158 | - | 141 | 149 | 163 | - |
| | 1200 | MBh | 34.2 | 35.5 | 38.9 | - | 33.5 | 34.7 | 38.0 | - | 32.7 | 33.8 | 37.1 | - | 31.9 | 33.0 | 36.2 | - | 30.3 | 31.4 | 34.4 | - | 28.0 | 29.1 | 31.8 | - |
| | | S/T | 0.73 | 0.61 | 0.42 | - | 0.76 | 0.63 | 0.44 | - | 0.77 | 0.65 | 0.45 | - | 0.80 | 0.67 | 0.46 | - | 0.83 | 0.69 | 0.48 | - | 0.84 | 0.70 | 0.48 | - |
| | | ΔT | 19 | 17 | 13 | - | 19 | 17 | 13 | - | 19 | 17 | 13 | - | 20 | 17 | 13 | - | 19 | 17 | 13 | - | 18 | 16 | 12 | - |
| | | kW | 2.35 | 2.40 | 2.48 | - | 2.53 | 2.59 | 2.67 | - | 2.70 | 2.76 | 2.85 | - | 2.84 | 2.90 | 3.00 | - | 2.96 | 3.03 | 3.13 | - | 3.07 | 3.13 | 3.24 | - |
| | | Amps | 9.9 | 10.1 | 10.4 | - | 10.6 | 10.8 | 11.1 | - | 11.4 | 11.6 | 12.0 | - | 12.1 | 12.4 | 12.8 | - | 12.8 | 13.1 | 13.5 | - | 13.5 | 13.8 | 14.3 | - |
| | | HI PR | 244 | 263 | 277 | - | 274 | 295 | 311 | - | 311 | 335 | 354 | - | 355 | 382 | 403 | - | 399 | 429 | 453 | - | 441 | 474 | 501 | - |
| | | LO PR | 111 | 118 | 129 | - | 118 | 125 | 137 | - | 122 | 130 | 142 | - | 128 | 137 | 149 | - | 134 | 143 | 156 | - | 139 | 148 | 162 | - |
| | 1050 | MBh | 31.6 | 32.8 | 35.9 | - | 30.9 | 32.0 | 35.1 | - | 30.1 | 31.2 | 34.2 | - | 29.4 | 30.5 | 33.4 | - | 27.9 | 29.0 | 31.7 | - | 25.9 | 26.8 | 29.4 | - |
| | | S/T | 0.70 | 0.59 | 0.41 | - | 0.73 | 0.61 | 0.42 | - | 0.75 | 0.62 | 0.43 | - | 0.77 | 0.64 | 0.45 | - | 0.80 | 0.67 | 0.46 | - | 0.81 | 0.67 | 0.47 | - |
| | | ΔT | 19 | 17 | 13 | - | 20 | 17 | 13 | - | 20 | 17 | 13 | - | 20 | 17 | 13 | - | 20 | 17 | 13 | - | 18 | 16 | 12 | - |
| | | kW | 2.29 | 2.34 | 2.42 | - | 2.47 | 2.53 | 2.61 | - | 2.63 | 2.69 | 2.78 | - | 2.77 | 2.83 | 2.92 | - | 2.89 | 2.95 | 3.05 | - | 2.99 | 3.05 | 3.16 | - |
| | | Amps | 9.6 | 9.8 | 10.1 | - | 10.3 | 10.5 | 10.8 | - | 11.1 | 11.4 | 11.7 | - | 11.8 | 12.1 | 12.4 | - | 12.5 | 12.8 | 13.2 | - | 13.2 | 13.5 | 13.9 | - |
| | | HI PR | 237 | 255 | 269 | - | 266 | 286 | 302 | - | 302 | 325 | 343 | - | 344 | 370 | 391 | - | 387 | 417 | 440 | - | 428 | 460 | 486 | - |
| | | LO PR | 108 | 115 | 125 | - | 114 | 121 | 132 | - | 119 | 126 | 138 | - | 124 | 132 | 145 | - | 130 | 139 | 152 | - | 135 | 144 | 157 | - |
| 75 | 1350 | MBh | 35.9 | 36.9 | 40.0 | 42.9 | 35.0 | 36.1 | 39.1 | 41.9 | 34.2 | 35.2 | 38.1 | 40.9 | 33.4 | 34.4 | 37.2 | 39.9 | 31.7 | 32.6 | 35.3 | 37.9 | 29.4 | 30.2 | 32.7 | 35.1 |
| | | S/T | 0.87 | 0.78 | 0.59 | 0.38 | 0.90 | 0.81 | 0.61 | 0.39 | 0.92 | 0.83 | 0.62 | 0.40 | 0.95 | 0.85 | 0.65 | 0.41 | 0.99 | 0.88 | 0.67 | 0.43 | 1.00 | 0.89 | 0.68 | 0.43 |
| | | ΔT | 21 | 20 | 16 | 11 | 21 | 20 | 16 | 11 | 22 | 20 | 16 | 11 | 22 | 20 | 16 | 11 | 21 | 20 | 16 | 11 | 20 | 18 | 15 | 10 |
| | | kW | 2.39 | 2.44 | 2.52 | 2.60 | 2.58 | 2.63 | 2.72 | 2.81 | 2.74 | 2.80 | 2.90 | 2.99 | 2.89 | 2.95 | 3.05 | 3.15 | 3.01 | 3.08 | 3.18 | 3.29 | 3.12 | 3.19 | 3.30 | 3.41 |
| | | Amps | 10.0 | 10.2 | 10.5 | 10.9 | 10.7 | 11.0 | 11.3 | 11.7 | 11.6 | 11.8 | 12.2 | 12.6 | 12.3 | 12.6 | 13.0 | 13.4 | 13.0 | 13.3 | 13.8 | 14.2 | 13.8 | 14.1 | 14.5 | 15.0 |
| | | HI PR | 249 | 268 | 283 | 295 | 279 | 301 | 317 | 331 | 318 | 342 | 361 | 377 | 362 | 389 | 411 | 429 | 407 | 438 | 463 | 483 | 450 | 484 | 511 | 533 |
| | | LO PR | 114 | 121 | 132 | 140 | 120 | 128 | 139 | 148 | 125 | 133 | 145 | 154 | 131 | 139 | 152 | 162 | 137 | 146 | 159 | 170 | 142 | 151 | 165 | 176 |
| | 1200 | MBh | 34.8 | 35.9 | 38.8 | 41.7 | 34.0 | 35.0 | 37.9 | 40.7 | 33.2 | 34.2 | 37.0 | 39.7 | 32.4 | **33.4** | 36.1 | 38.8 | 30.8 | 31.7 | 34.3 | 36.8 | 28.5 | 29.4 | 31.8 | 34.1 |
| | | S/T | 0.83 | 0.74 | 0.56 | 0.36 | 0.86 | 0.77 | 0.58 | 0.37 | 0.88 | 0.79 | 0.60 | 0.38 | 0.91 | **0.81** | 0.62 | 0.40 | 0.94 | 0.84 | 0.64 | 0.41 | 0.95 | 0.85 | 0.64 | 0.41 |
| | | ΔT | 22 | 20 | 17 | 12 | 22 | 21 | 17 | 12 | 22 | 21 | 17 | 12 | 23 | **21** | 17 | 12 | 22 | 20 | 17 | 12 | 21 | 19 | 16 | 11 |
| | | kW | 2.37 | 2.42 | 2.50 | 2.58 | 2.56 | 2.61 | 2.70 | 2.79 | 2.72 | 2.78 | 2.87 | 2.97 | 2.86 | **2.93** | 3.03 | 3.13 | 2.99 | 3.05 | 3.16 | 3.26 | 3.09 | 3.16 | 3.27 | 3.38 |
| | | Amps | 9.9 | 10.1 | 10.4 | 10.8 | 10.7 | 10.9 | 11.2 | 11.6 | 11.5 | 11.7 | 12.1 | 12.5 | 12.2 | **12.5** | 12.9 | 13.3 | 12.9 | 13.2 | 13.6 | 14.1 | 13.6 | 14.0 | 14.4 | 14.9 |
| | | HI PR | 247 | 265 | 280 | 292 | 277 | 298 | 314 | 328 | 315 | 339 | 358 | 373 | 358 | **386** | 407 | 425 | 403 | 434 | 458 | 478 | 445 | 479 | 506 | 528 |
| | | LO PR | 112 | 120 | 131 | 139 | 119 | 126 | 138 | 147 | 123 | 131 | 143 | 153 | 130 | **138** | 151 | 160 | 136 | 145 | 158 | 168 | 141 | 150 | 163 | 174 |
| | 1050 | MBh | 32.1 | 33.1 | 35.8 | 38.5 | 31.4 | 32.3 | 35.0 | 37.6 | 30.7 | 31.6 | 34.2 | 36.7 | 29.9 | 30.8 | 33.3 | 35.8 | 28.4 | 29.3 | 31.7 | 34.0 | 26.3 | 27.1 | 29.3 | 31.5 |
| | | S/T | 0.80 | 0.71 | 0.54 | 0.35 | 0.83 | 0.74 | 0.56 | 0.36 | 0.85 | 0.76 | 0.57 | 0.37 | 0.88 | 0.78 | 0.59 | 0.38 | 0.91 | 0.81 | 0.62 | 0.40 | 0.92 | 0.82 | 0.62 | 0.40 |
| | | ΔT | 22 | 21 | 17 | 12 | 23 | 21 | 17 | 12 | 23 | 21 | 17 | 12 | 23 | 21 | 17 | 12 | 23 | 21 | 17 | 12 | 21 | 19 | 16 | 11 |
| | | kW | 2.31 | 2.36 | 2.44 | 2.52 | 2.49 | 2.55 | 2.63 | 2.72 | 2.65 | 2.71 | 2.80 | 2.89 | 2.79 | 2.85 | 2.95 | 3.05 | 2.91 | 2.98 | 3.08 | 3.18 | 3.01 | 3.08 | 3.18 | 3.29 |
| | | Amps | 9.7 | 9.9 | 10.2 | 10.5 | 10.4 | 10.6 | 10.9 | 11.3 | 11.2 | 11.5 | 11.8 | 12.2 | 11.9 | 12.2 | 12.5 | 13.0 | 12.6 | 12.9 | 13.3 | 13.8 | 13.3 | 13.6 | 14.0 | 14.5 |
| | | HI PR | 239 | 257 | 272 | 283 | 268 | 289 | 305 | 318 | 305 | 328 | 347 | 362 | 348 | 374 | 395 | 412 | 391 | 421 | 444 | 463 | 432 | 465 | 491 | 512 |
| | | LO PR | 109 | 116 | 127 | 135 | 115 | 123 | 134 | 142 | 120 | 127 | 139 | 148 | 126 | 134 | 146 | 156 | 132 | 140 | 153 | 163 | 136 | 145 | 158 | 169 |

IDB = Entering Indoor Dry Bulb Temperature
Shaded area reflects ACCA (TVA) conditions
KW = Total system power
High and low pressures are measured at the liquid and suction access fittings.
Amps: Unit amps (comp.+ evaporator + condenser fan motors)
Design Subcooling, 10 ±2 °F @ liquid access fitting connection AHRI 95 test conditions. Design Superheat 9 ±2°F @ compressor suction access fitting connection.

# EXPANDED COOLING DATA — GPH1436H41A (CONT.)

| | | | Outdoor Ambient Temperature | | | | | | | | | | | | | | | | | | | | | | | |
|---|---|---|---|---|---|---|---|---|---|---|---|---|---|---|---|---|---|---|---|---|---|---|---|---|---|---|
| | | | 65 | | | | 75 | | | | 85 | | | | 95 | | | | 105 | | | | 115 | | | |
| | | | Entering Indoor Wet Bulb Temperature | | | | | | | | | | | | | | | | | | | | | | | |
| IDB | Airflow | | 59 | 63 | 67 | 71 | 59 | 63 | 67 | 71 | 59 | 63 | 67 | 71 | 59 | 63 | 67 | 71 | 59 | 63 | 67 | 71 | 59 | 63 | 67 | 71 |
| 80 | 1350 | MBh | 36.5 | 37.3 | 39.9 | 42.6 | 35.7 | 36.4 | 38.9 | 41.6 | 34.8 | 35.6 | 38.0 | 40.6 | 34.0 | 34.7 | 37.1 | 39.6 | 32.3 | 33.0 | 35.2 | 37.7 | 29.9 | 30.5 | 32.6 | 34.9 |
| | | S/T | 0.95 | 0.89 | 0.73 | 0.54 | 1.00 | 0.93 | 0.75 | 0.56 | 1.00 | 0.95 | 0.77 | 0.58 | 1.00 | 1.00 | 0.80 | 0.60 | 1.00 | 1.00 | 0.83 | 0.62 | 1.00 | 1.00 | 0.83 | 0.62 |
| | | ΔT | 24 | 23 | 20 | 16 | 24 | 23 | 20 | 16 | 24 | 23 | 20 | 16 | 23 | 24 | 20 | 16 | 22 | 22 | 20 | 16 | 20 | 21 | 19 | 15 |
| | | kW | 2.41 | 2.46 | 2.54 | 2.62 | 2.60 | 2.66 | 2.74 | 2.83 | 2.76 | 2.83 | 2.92 | 3.02 | 2.91 | 2.98 | 3.08 | 3.18 | 3.04 | 3.11 | 3.21 | 3.32 | 3.14 | 3.22 | 3.33 | 3.44 |
| | | Amps | 10.1 | 10.3 | 10.6 | 11.0 | 10.8 | 11.1 | 11.4 | 11.8 | 11.7 | 11.9 | 12.3 | 12.7 | 12.4 | 12.7 | 13.1 | 13.6 | 13.2 | 13.5 | 13.9 | 14.4 | 13.9 | 14.2 | 14.7 | 15.2 |
| | | HI PR | 252 | 271 | 286 | 298 | 282 | 304 | 321 | 334 | 321 | 345 | 365 | 380 | 366 | 393 | 415 | 433 | 411 | 443 | 467 | 487 | 454 | 489 | 516 | 539 |
| | | LO PR | 115 | 122 | 133 | 142 | 121 | 129 | 141 | 150 | 126 | 134 | 146 | 156 | 132 | 141 | 154 | 164 | 139 | 147 | 161 | 171 | 143 | 153 | 167 | 177 |
| | 1200 | MBh | 35.4 | 36.2 | 38.7 | 41.4 | 34.6 | 35.4 | 37.8 | 40.4 | 33.8 | 34.5 | 36.9 | 39.4 | 33.0 | 33.7 | **36.0** | 38.5 | 31.3 | 32.0 | 34.2 | 36.6 | 29.0 | 29.7 | 31.7 | 33.9 |
| | | S/T | 0.91 | 0.85 | 0.69 | 0.52 | 0.94 | 0.88 | 0.72 | 0.54 | 0.97 | 0.91 | 0.74 | 0.55 | 1.00 | 0.93 | **0.76** | 0.57 | 1.00 | 0.97 | 0.79 | 0.59 | 1.00 | 0.98 | 0.80 | 0.60 |
| | | ΔT | 25 | 24 | 21 | 16 | 25 | 24 | 21 | 17 | 25 | 24 | 21 | 17 | 25 | 24 | **21** | 17 | 24 | 24 | 21 | 17 | 22 | 22 | 19 | 15 |
| | | kW | 2.39 | 2.44 | 2.52 | 2.60 | 2.58 | 2.63 | 2.72 | 2.81 | 2.74 | 2.80 | 2.90 | 2.99 | 2.89 | 2.95 | **3.05** | 3.15 | 3.01 | 3.08 | 3.18 | 3.29 | 3.12 | 3.19 | 3.30 | 3.41 |
| | | Amps | 10.0 | 10.2 | 10.5 | 10.9 | 10.7 | 11.0 | 11.3 | 11.7 | 11.6 | 11.8 | 12.2 | 12.6 | 12.3 | 12.6 | **13.0** | 13.4 | 13.0 | 13.3 | 13.8 | 14.2 | 13.8 | 14.1 | 14.5 | 15.0 |
| | | HI PR | 249 | 268 | 283 | 295 | 279 | 301 | 318 | 331 | 318 | 342 | 361 | 377 | 362 | 390 | **411** | 429 | 407 | 438 | 463 | 483 | 450 | 484 | 511 | 533 |
| | | LO PR | 114 | 121 | 132 | 140 | 120 | 128 | 139 | 148 | 125 | 133 | 145 | 154 | 131 | 139 | **152** | 162 | 137 | 146 | 159 | 170 | 142 | 151 | 165 | 176 |
| | 1050 | MBh | 32.7 | 33.4 | 35.7 | 38.2 | 32.0 | 32.7 | 34.9 | 37.3 | 31.2 | 31.9 | 34.1 | 36.4 | 30.4 | 31.1 | 33.2 | 35.5 | 28.9 | 29.5 | 31.6 | 33.7 | 26.8 | 27.4 | 29.2 | 31.3 |
| | | S/T | 0.88 | 0.82 | 0.67 | 0.50 | 0.91 | 0.85 | 0.69 | 0.52 | 0.93 | 0.87 | 0.71 | 0.53 | 0.96 | 0.90 | 0.73 | 0.55 | 1.00 | 0.94 | 0.76 | 0.57 | 1.01 | 0.94 | 0.77 | 0.57 |
| | | ΔT | 25 | 24 | 21 | 17 | 25 | 24 | 21 | 17 | 25 | 24 | 21 | 17 | 26 | 25 | 21 | 17 | 25 | 24 | 21 | 17 | 24 | 23 | 20 | 16 |
| | | kW | 2.33 | 2.38 | 2.46 | 2.54 | 2.51 | 2.57 | 2.65 | 2.74 | 2.67 | 2.73 | 2.82 | 2.92 | 2.81 | 2.88 | 2.97 | 3.07 | 2.94 | 3.00 | 3.10 | 3.21 | 3.04 | 3.11 | 3.21 | 3.32 |
| | | Amps | 9.8 | 10.0 | 10.3 | 10.6 | 10.5 | 10.7 | 11.0 | 11.4 | 11.3 | 11.5 | 11.9 | 12.3 | 12.0 | 12.3 | 12.7 | 13.1 | 12.7 | 13.0 | 13.4 | 13.9 | 13.4 | 13.7 | 14.1 | 14.6 |
| | | HI PR | 242 | 260 | 274 | 286 | 271 | 292 | 308 | 321 | 308 | 332 | 350 | 365 | 351 | 378 | 399 | 416 | 395 | 425 | 449 | 468 | 436 | 470 | 496 | 517 |
| | | LO PR | 110 | 117 | 128 | 136 | 116 | 124 | 135 | 144 | 121 | 129 | 140 | 150 | 127 | 135 | 148 | 157 | 133 | 142 | 155 | 165 | 138 | 146 | 160 | 170 |
| 85 | 1350 | MBh | 37.2 | 37.9 | 39.7 | 42.3 | 36.3 | 37.0 | 38.7 | 41.3 | 35.4 | 36.1 | 37.8 | 40.3 | 34.6 | 35.2 | 36.9 | 39.4 | 32.8 | 33.5 | 35.0 | 37.4 | 30.4 | 31.0 | 32.5 | 34.6 |
| | | S/T | 1.00 | 0.96 | 0.87 | 0.71 | 1.00 | 1.00 | 0.90 | 0.73 | 1.00 | 1.00 | 0.92 | 0.75 | 1.00 | 1.00 | 0.95 | 0.77 | 1.00 | 1.00 | 0.99 | 0.80 | 1.00 | 1.00 | 1.00 | 0.81 |
| | | ΔT | 25 | 25 | 23 | 20 | 25 | 25 | 24 | 21 | 24 | 25 | 24 | 21 | 24 | 24 | 24 | 21 | 22 | 23 | 24 | 20 | 21 | 21 | 22 | 19 |
| | | kW | 2.43 | 2.48 | 2.56 | 2.65 | 2.62 | 2.68 | 2.76 | 2.86 | 2.79 | 2.85 | 2.94 | 3.04 | 2.94 | 3.00 | 3.10 | 3.21 | 3.06 | 3.13 | 3.24 | 3.35 | 3.17 | 3.24 | 3.35 | 3.47 |
| | | Amps | 10.2 | 10.4 | 10.7 | 11.1 | 10.9 | 11.2 | 11.5 | 11.9 | 11.8 | 12.0 | 12.4 | 12.8 | 12.5 | 12.8 | 13.2 | 13.7 | 13.3 | 13.6 | 14.0 | 14.5 | 14.0 | 14.3 | 14.8 | 15.3 |
| | | HI PR | 254 | 273 | 289 | 301 | 285 | 307 | 324 | 338 | 324 | 349 | 368 | 384 | 369 | 397 | 420 | 438 | 415 | 447 | 472 | 492 | 459 | 494 | 522 | 544 |
| | | LO PR | 116 | 123 | 135 | 143 | 122 | 130 | 142 | 151 | 127 | 135 | 148 | 157 | 134 | 142 | 155 | 165 | 140 | 149 | 163 | 173 | 145 | 154 | 168 | 179 |
| | 1200 | MBh | 36.1 | 36.8 | 38.5 | 41.1 | 35.2 | 35.9 | 37.6 | 40.1 | 34.4 | 35.1 | 36.7 | 39.2 | 33.6 | 34.2 | 35.8 | 38.2 | 31.9 | 32.5 | 34.0 | 36.3 | 29.5 | 30.1 | 31.5 | 33.6 |
| | | S/T | 0.95 | 0.92 | 0.83 | 0.67 | 0.99 | 0.95 | 0.86 | 0.70 | 1.00 | 0.98 | 0.88 | 0.72 | 1.00 | 1.00 | 0.91 | 0.74 | 1.00 | 1.00 | 0.94 | 0.77 | 1.00 | 1.00 | 0.95 | 0.77 |
| | | ΔT | 26 | 26 | 24 | 21 | 27 | 26 | 25 | 21 | 26 | 26 | 25 | 21 | 26 | 26 | 25 | 22 | 24 | 25 | 25 | 21 | 23 | 23 | 23 | 20 |
| | | kW | 2.41 | 2.46 | 2.54 | 2.62 | 2.60 | 2.66 | 2.74 | 2.83 | 2.76 | 2.83 | 2.92 | 3.02 | 2.91 | 2.98 | 3.08 | 3.18 | 3.04 | 3.11 | 3.21 | 3.32 | 3.14 | 3.22 | 3.33 | 3.44 |
| | | Amps | 10.1 | 10.3 | 10.6 | 11.0 | 10.8 | 11.1 | 11.4 | 11.8 | 11.7 | 11.9 | 12.3 | 12.7 | 12.4 | 12.7 | 13.1 | 13.6 | 13.2 | 13.5 | 13.9 | 14.4 | 13.9 | 14.2 | 14.7 | 15.2 |
| | | HI PR | 252 | 271 | 286 | 298 | 282 | 304 | 321 | 334 | 321 | 345 | 365 | 380 | 366 | 393 | 415 | 433 | 411 | 443 | 467 | 487 | 454 | 489 | 516 | 539 |
| | | LO PR | 115 | 122 | 133 | 142 | 121 | 129 | 141 | 150 | 126 | 134 | 146 | 156 | 132 | 141 | 154 | 164 | 139 | 147 | 161 | 171 | 143 | 153 | 167 | 177 |
| | 1050 | MBh | 33.3 | 33.9 | 35.5 | 37.9 | 32.5 | 33.1 | 34.7 | 37.0 | 31.7 | 32.4 | 33.9 | 36.2 | 31.0 | 31.6 | 33.1 | 35.3 | 29.4 | 30.0 | 31.4 | 33.5 | 27.3 | 27.8 | 29.1 | 31.0 |
| | | S/T | 0.92 | 0.89 | 0.80 | 0.65 | 0.95 | 0.92 | 0.83 | 0.67 | 0.98 | 0.94 | 0.85 | 0.69 | 1.00 | 0.97 | 0.88 | 0.71 | 1.00 | 1.00 | 0.91 | 0.74 | 1.00 | 1.00 | 0.92 | 0.74 |
| | | ΔT | 27 | 26 | 25 | 22 | 27 | 27 | 25 | 22 | 27 | 27 | 25 | 22 | 27 | 27 | 25 | 22 | 26 | 26 | 25 | 22 | 24 | 24 | 23 | 20 |
| | | kW | 2.35 | 2.40 | 2.48 | 2.56 | 2.53 | 2.59 | 2.67 | 2.76 | 2.70 | 2.76 | 2.85 | 2.94 | 2.84 | 2.90 | 3.00 | 3.10 | 2.96 | 3.03 | 3.13 | 3.23 | 3.06 | 3.13 | 3.24 | 3.35 |
| | | Amps | 9.9 | 10.1 | 10.4 | 10.7 | 10.6 | 10.8 | 11.1 | 11.5 | 11.4 | 11.6 | 12.0 | 12.4 | 12.1 | 12.4 | 12.8 | 13.2 | 12.8 | 13.1 | 13.5 | 14.0 | 13.5 | 13.8 | 14.3 | 14.8 |
| | | HI PR | 244 | 263 | 277 | 289 | 274 | 295 | 311 | 324 | 311 | 335 | 354 | 369 | 355 | 382 | 403 | 420 | 399 | 429 | 453 | 473 | 441 | 474 | 501 | 522 |
| | | LO PR | 111 | 118 | 129 | 138 | 118 | 125 | 136 | 145 | 122 | 130 | 142 | 151 | 128 | 136 | 149 | 159 | 134 | 143 | 156 | 166 | 139 | 148 | 162 | 172 |

IDB = Entering Indoor Dry Bulb Temperature — Shaded area reflects AHRI (TVA) conditions — KW = Total system power

High and low pressures are measured at the liquid and suction access fittings. — Amps: Unit amps (comp.+ evaporator + condenser fan motors)

Design Subcooling, 10 ±2 °F @ liquid access fitting connection AHRI 95 test conditions. Design Superheat 9 ±2°F @ compressor suction access fitting connection.

# EXPANDED COOLING DATA — GPH1442H41A

| | | | Outdoor Ambient Temperature | | | | | | | | | | | | | | | | | | | | | | | |
|---|---|---|---|---|---|---|---|---|---|---|---|---|---|---|---|---|---|---|---|---|---|---|---|---|---|---|
| | | | 65 | | | | 75 | | | | 85 | | | | 95 | | | | 105 | | | | 115 | | | |
| | | | Entering Indoor Wet Bulb Temperature | | | | | | | | | | | | | | | | | | | | | | | |
| IDB | Airflow | | 59 | 63 | 67 | 71 | 59 | 63 | 67 | 71 | 59 | 63 | 67 | 71 | 59 | 63 | 67 | 71 | 59 | 63 | 67 | 71 | 59 | 63 | 67 | 71 |
| 70 | 1461 | MBh | 39.2 | 40.6 | 44.5 | - | 38.3 | 39.7 | 43.5 | - | 37.4 | 38.7 | 42.4 | - | 36.5 | 37.8 | 41.4 | - | 34.6 | 35.9 | 39.3 | - | 32.1 | 33.3 | 36.4 | - |
| | | S/T | 0.75 | 0.62 | 0.43 | - | 0.78 | 0.65 | 0.45 | - | 0.79 | 0.66 | 0.46 | - | 0.82 | 0.69 | 0.47 | - | 0.85 | 0.71 | 0.49 | - | 0.86 | 0.72 | 0.50 | - |
| | | Δ T | 18 | 16 | 12 | - | 19 | 16 | 12 | - | 19 | 16 | 12 | - | 19 | 16 | 12 | - | 19 | 16 | 12 | - | 17 | 15 | 11 | - |
| | | kW | 2.62 | 2.67 | 2.76 | - | 2.82 | 2.88 | 2.97 | - | 3.00 | 3.06 | 3.16 | - | 3.16 | 3.23 | 3.33 | - | 3.29 | 3.36 | 3.48 | - | 3.41 | 3.48 | 3.60 | - |
| | | Amps | 10.6 | 10.8 | 11.1 | - | 11.4 | 11.6 | 12.0 | - | 12.3 | 12.6 | 13.0 | - | 13.2 | 13.5 | 13.9 | - | 14.0 | 14.3 | 14.8 | - | 14.8 | 15.2 | 15.7 | - |
| | | HI PR | 240 | 258 | 272 | - | 269 | 289 | 305 | - | 306 | 329 | 347 | - | 348 | 375 | 396 | - | 392 | 422 | 445 | - | 433 | 466 | 492 | - |
| | | LO PR | 111 | 118 | 129 | - | 117 | 125 | 136 | - | 122 | 130 | 141 | - | 128 | 136 | 149 | - | 134 | 143 | 156 | - | 139 | 148 | 161 | - |
| | 1300 | MBh | 38.1 | 39.4 | 43.2 | - | 37.2 | 38.5 | 42.2 | - | 36.3 | 37.6 | 41.2 | - | 35.4 | 36.7 | 40.2 | - | 33.6 | 34.9 | 38.2 | - | 31.2 | 32.3 | 35.4 | - |
| | | S/T | 0.71 | 0.60 | 0.41 | - | 0.74 | 0.62 | 0.43 | - | 0.76 | 0.63 | 0.44 | - | 0.78 | 0.65 | 0.45 | - | 0.81 | 0.68 | 0.47 | - | 0.82 | 0.68 | 0.47 | - |
| | | Δ T | 19 | 17 | 13 | - | 19 | 17 | 13 | - | 19 | 17 | 13 | - | 20 | 17 | 13 | - | 19 | 17 | 13 | - | 18 | 16 | 12 | - |
| | | kW | 2.60 | 2.65 | 2.73 | - | 2.80 | 2.86 | 2.95 | - | 2.97 | 3.04 | 3.14 | - | 3.13 | 3.20 | 3.30 | - | 3.26 | 3.34 | 3.45 | - | 3.38 | 3.45 | 3.57 | - |
| | | Amps | 10.5 | 10.7 | 11.0 | - | 11.3 | 11.5 | 11.9 | - | 12.2 | 12.5 | 12.9 | - | 13.0 | 13.4 | 13.8 | - | 13.9 | 14.2 | 14.7 | - | 14.7 | 15.0 | 15.5 | - |
| | | HI PR | 237 | 255 | 270 | - | 266 | 286 | 302 | - | 303 | 326 | 344 | - | 345 | 371 | 392 | - | 388 | 417 | 441 | - | 429 | 461 | 487 | - |
| | | LO PR | 110 | 117 | 128 | - | 116 | 123 | 135 | - | 121 | 128 | 140 | - | 127 | 135 | 147 | - | 133 | 141 | 154 | - | 137 | 146 | 159 | - |
| | 1139 | MBh | 35.1 | 36.4 | 39.9 | - | 34.3 | 35.6 | 39.0 | - | 33.5 | 34.7 | 38.0 | - | 32.7 | 33.9 | 37.1 | - | 31.0 | 32.2 | 35.2 | - | 28.8 | 29.8 | 32.7 | - |
| | | S/T | 0.69 | 0.57 | 0.40 | - | 0.71 | 0.60 | 0.41 | - | 0.73 | 0.61 | 0.42 | - | 0.75 | 0.63 | 0.44 | - | 0.78 | 0.65 | 0.45 | - | 0.79 | 0.66 | 0.46 | - |
| | | Δ T | 19 | 17 | 13 | - | 20 | 17 | 13 | - | 20 | 17 | 13 | - | 20 | 17 | 13 | - | 20 | 17 | 13 | - | 18 | 16 | 12 | - |
| | | kW | 2.53 | 2.59 | 2.67 | - | 2.73 | 2.79 | 2.88 | - | 2.90 | 2.96 | 3.06 | - | 3.05 | 3.12 | 3.22 | - | 3.18 | 3.25 | 3.36 | - | 3.29 | 3.36 | 3.48 | - |
| | | Amps | 10.2 | 10.4 | 10.8 | - | 11.0 | 11.2 | 11.6 | - | 11.9 | 12.2 | 12.6 | - | 12.7 | 13.0 | 13.4 | - | 13.5 | 13.8 | 14.3 | - | 14.3 | 14.6 | 15.1 | - |
| | | HI PR | 230 | 248 | 261 | - | 258 | 278 | 293 | - | 294 | 316 | 334 | - | 334 | 360 | 380 | - | 376 | 405 | 428 | - | 416 | 447 | 472 | - |
| | | LO PR | 107 | 113 | 124 | - | 113 | 120 | 131 | - | 117 | 124 | 136 | - | 123 | 131 | 143 | - | 129 | 137 | 150 | - | 133 | 142 | 155 | - |
| 75 | 1461 | MBh | 39.9 | 41.0 | 44.4 | 47.7 | 38.9 | 40.1 | 43.4 | 46.6 | 38.0 | 39.1 | 42.4 | 45.5 | 37.1 | 38.2 | 41.3 | 44.4 | 35.2 | 36.3 | 39.3 | 42.1 | 32.6 | 33.6 | 36.4 | 39.0 |
| | | S/T | 0.85 | 0.76 | 0.58 | 0.37 | 0.88 | 0.79 | 0.60 | 0.38 | 0.90 | 0.81 | 0.61 | 0.39 | 0.93 | 0.83 | 0.63 | 0.41 | 0.97 | 0.87 | 0.66 | 0.42 | 0.98 | 0.87 | 0.66 | 0.43 |
| | | Δ T | 21 | 20 | 16 | 11 | 22 | 20 | 16 | 11 | 22 | 20 | 16 | 11 | 22 | 20 | 16 | 11 | 21 | 20 | 16 | 11 | 20 | 18 | 15 | 10 |
| | | kW | 2.64 | 2.69 | 2.78 | 2.87 | 2.84 | 2.90 | 3.00 | 3.10 | 3.02 | 3.09 | 3.19 | 3.30 | 3.18 | 3.25 | 3.36 | 3.47 | 3.32 | 3.39 | 3.51 | 3.62 | 3.43 | 3.51 | 3.63 | 3.75 |
| | | Amps | 10.6 | 10.9 | 11.2 | 11.6 | 11.5 | 11.7 | 12.1 | 12.6 | 12.4 | 12.7 | 13.2 | 13.6 | 13.3 | 13.6 | 14.0 | 14.6 | 14.1 | 14.5 | 14.9 | 15.5 | 14.9 | 15.3 | 15.8 | 16.4 |
| | | HI PR | 242 | 260 | 275 | 287 | 272 | 292 | 309 | 322 | 309 | 332 | 351 | 366 | 352 | 379 | 400 | 417 | 396 | 426 | 450 | 469 | 437 | 471 | 497 | 518 |
| | | LO PR | 112 | 119 | 130 | 139 | 118 | 126 | 137 | 146 | 123 | 131 | 143 | 152 | 129 | 137 | 150 | 160 | 135 | 144 | 157 | 168 | 140 | 149 | 163 | 173 |
| | 1300 | MBh | 38.7 | 39.8 | 43.1 | 46.3 | 37.8 | 38.9 | 42.1 | 45.2 | 36.9 | 38.0 | 41.1 | 44.1 | 36.0 | **37.1** | 40.1 | 43.1 | 34.2 | 35.2 | 38.1 | 40.9 | 31.7 | 32.6 | 35.3 | 37.9 |
| | | S/T | 0.81 | 0.73 | 0.55 | 0.35 | 0.84 | 0.75 | 0.57 | 0.37 | 0.86 | 0.77 | 0.58 | 0.38 | 0.89 | **0.80** | 0.60 | 0.39 | 0.92 | 0.83 | 0.62 | 0.40 | 0.93 | 0.83 | 0.63 | 0.41 |
| | | Δ T | 22 | 20 | 17 | 12 | 22 | 21 | 17 | 12 | 22 | 21 | 17 | 12 | 23 | **21** | 17 | 12 | 22 | 21 | 17 | 12 | 21 | 19 | 16 | 11 |
| | | kW | 2.62 | 2.67 | 2.76 | 2.85 | 2.82 | 2.88 | 2.97 | 3.07 | 3.00 | 3.06 | 3.16 | 3.27 | 3.16 | **3.23** | 3.33 | 3.44 | 3.29 | 3.36 | 3.48 | 3.59 | 3.41 | 3.48 | 3.60 | 3.72 |
| | | Amps | 10.6 | 10.8 | 11.1 | 11.5 | 11.4 | 11.6 | 12.0 | 12.5 | 12.3 | 12.6 | 13.0 | 13.5 | 13.2 | **13.5** | 13.9 | 14.4 | 14.0 | 14.3 | 14.8 | 15.3 | 14.8 | 15.2 | 15.7 | 16.2 |
| | | HI PR | 240 | 258 | 272 | 284 | 269 | 289 | 306 | 319 | 306 | 329 | 347 | 362 | 348 | **375** | 396 | 413 | 392 | 422 | 445 | 464 | 433 | 466 | 492 | 513 |
| | | LO PR | 111 | 118 | 129 | 137 | 117 | 125 | 136 | 145 | 122 | 130 | 141 | 151 | 128 | **136** | 149 | 158 | 134 | 143 | 156 | 166 | 139 | 148 | 161 | 172 |
| | 1139 | MBh | 35.7 | 36.8 | 39.8 | 42.7 | 34.9 | 35.9 | 38.9 | 41.7 | 34.1 | 35.1 | 38.0 | 40.7 | 33.2 | 34.2 | 37.0 | 39.7 | 31.6 | 32.5 | 35.2 | 37.8 | 29.2 | 30.1 | 32.6 | 35.0 |
| | | S/T | 0.78 | 0.70 | 0.53 | 0.34 | 0.81 | 0.72 | 0.55 | 0.35 | 0.83 | 0.74 | 0.56 | 0.36 | 0.86 | 0.77 | 0.58 | 0.37 | 0.89 | 0.80 | 0.60 | 0.39 | 0.90 | 0.80 | 0.61 | 0.39 |
| | | Δ T | 23 | 21 | 17 | 12 | 23 | 21 | 17 | 12 | 23 | 21 | 17 | 12 | 23 | 21 | 17 | 12 | 23 | 21 | 17 | 12 | 21 | 20 | 16 | 11 |
| | | kW | 2.55 | 2.61 | 2.69 | 2.78 | 2.75 | 2.81 | 2.90 | 2.99 | 2.92 | 2.99 | 3.09 | 3.19 | 3.08 | 3.14 | 3.25 | 3.36 | 3.21 | 3.28 | 3.39 | 3.50 | 3.32 | 3.39 | 3.51 | 3.63 |
| | | Amps | 10.3 | 10.5 | 10.8 | 11.2 | 11.1 | 11.3 | 11.7 | 12.1 | 12.0 | 12.3 | 12.7 | 13.1 | 12.8 | 13.1 | 13.5 | 14.0 | 13.6 | 13.9 | 14.4 | 14.9 | 14.4 | 14.7 | 15.2 | 15.8 |
| | | HI PR | 232 | 250 | 264 | 275 | 261 | 281 | 296 | 309 | 297 | 319 | 337 | 352 | 338 | 364 | 384 | 400 | 380 | 409 | 432 | 450 | 420 | 452 | 477 | 498 |
| | | LO PR | 108 | 114 | 125 | 133 | 114 | 121 | 132 | 141 | 118 | 126 | 137 | 146 | 124 | 132 | 144 | 154 | 130 | 138 | 151 | 161 | 135 | 143 | 156 | 166 |

IDB = Entering Indoor Dry Bulb Temperature
Shaded area reflects ACCA (TVA) conditions
KW = Total system power
High and low pressures are measured at the liquid and suction access fittings.
Amps: Unit amps (comp.+ evaporator + condenser fan motors)
Design Subcooling, 10 ±2 °F @ liquid access fitting connection AHRI 95 test conditions. Design Superheat 9 ±2°F @ compressor suction access fitting connection.

# EXPANDED COOLING DATA — GPH1442H41A (CONT.)

| | | | Outdoor Ambient Temperature | | | | | | | | | | | | | | | | | | | | | | | |
|---|---|---|---|---|---|---|---|---|---|---|---|---|---|---|---|---|---|---|---|---|---|---|---|---|---|---|
| | | | 65 | | | | 75 | | | | 85 | | | | 95 | | | | 105 | | | | 115 | | | |
| | | | Entering Indoor Wet Bulb Temperature | | | | | | | | | | | | | | | | | | | | | | | |
| IDB | Airflow | | 59 | 63 | 67 | 71 | 59 | 63 | 67 | 71 | 59 | 63 | 67 | 71 | 59 | 63 | 67 | 71 | 59 | 63 | 67 | 71 | 59 | 63 | 67 | 71 |
| 80 | 1461 | MBh | 40.6 | 41.5 | 44.3 | 47.3 | 39.6 | 40.5 | 43.3 | 46.2 | 38.7 | 39.5 | 42.2 | 45.1 | 37.7 | 38.6 | 41.2 | 44.0 | 35.9 | 36.6 | 39.1 | 41.8 | 33.2 | 33.9 | 36.3 | 38.8 |
| | | S/T | 0.93 | 0.87 | 0.71 | 0.53 | 0.97 | 0.91 | 0.74 | 0.55 | 1.00 | 0.93 | 0.76 | 0.57 | 1.00 | 0.96 | 0.78 | 0.58 | 1.00 | 1.00 | 0.81 | 0.61 | 1.00 | 1.00 | 0.82 | 0.61 |
| | | Δ T | 24 | 23 | 20 | 16 | 24 | 23 | 20 | 16 | 24 | 23 | 20 | 16 | 24 | 23 | 20 | 16 | 23 | 23 | 20 | 16 | 21 | 21 | 19 | 15 |
| | | kW | 2.66 | 2.72 | 2.80 | 2.89 | 2.87 | 2.93 | 3.02 | 3.12 | 3.05 | 3.12 | 3.22 | 3.33 | 3.21 | 3.28 | 3.39 | 3.50 | 3.35 | 3.42 | 3.54 | 3.66 | 3.46 | 3.54 | 3.66 | 3.79 |
| | | Amps | 10.7 | 11.0 | 11.3 | 11.7 | 11.6 | 11.9 | 12.2 | 12.7 | 12.6 | 12.9 | 13.3 | 13.8 | 13.4 | 13.7 | 14.2 | 14.7 | 14.2 | 14.6 | 15.1 | 15.6 | 15.1 | 15.4 | 15.9 | 16.5 |
| | | HI PR | 244 | 263 | 278 | 290 | 274 | 295 | 312 | 325 | 312 | 336 | 354 | 370 | 355 | 382 | 404 | 421 | 400 | 430 | 454 | 474 | 442 | 475 | 502 | 523 |
| | | LO PR | 113 | 120 | 131 | 140 | 120 | 127 | 139 | 148 | 124 | 132 | 144 | 154 | 131 | 139 | 152 | 161 | 137 | 146 | 159 | 169 | 141 | 151 | 164 | 175 |
| | 1300 | MBh | 39.4 | 40.2 | 43.0 | 46.0 | 38.5 | 39.3 | 42.0 | 44.9 | 37.6 | 38.4 | 41.0 | 43.8 | 36.6 | 37.4 | **40.0** | 42.8 | 34.8 | 35.6 | 38.0 | 40.6 | 32.2 | 32.9 | 35.2 | 37.6 |
| | | S/T | 0.89 | 0.83 | 0.68 | 0.51 | 0.92 | 0.86 | 0.70 | 0.53 | 0.95 | 0.89 | 0.72 | 0.54 | 0.98 | 0.91 | **0.74** | 0.56 | 1.00 | 0.95 | 0.77 | 0.58 | 1.00 | 0.96 | 0.78 | 0.58 |
| | | Δ T | 25 | 24 | 21 | 16 | 25 | 24 | 21 | 17 | 25 | 24 | 21 | 17 | 25 | 24 | **21** | 17 | 25 | 24 | 21 | 17 | 23 | 22 | 19 | 16 |
| | | kW | 2.64 | 2.69 | 2.78 | 2.87 | 2.84 | 2.90 | 3.00 | 3.10 | 3.02 | 3.09 | 3.19 | 3.30 | 3.18 | 3.25 | **3.36** | 3.47 | 3.32 | 3.39 | 3.51 | 3.62 | 3.43 | 3.51 | 3.63 | 3.75 |
| | | Amps | 10.6 | 10.9 | 11.2 | 11.6 | 11.5 | 11.7 | 12.1 | 12.6 | 12.4 | 12.7 | 13.2 | 13.6 | 13.3 | 13.6 | **14.0** | 14.6 | 14.1 | 14.5 | 14.9 | 15.5 | 14.9 | 15.3 | 15.8 | 16.4 |
| | | HI PR | 242 | 260 | 275 | 287 | 272 | 292 | 309 | 322 | 309 | 332 | 351 | 366 | 352 | 379 | **400** | 417 | 396 | 426 | 450 | 469 | 437 | 471 | 497 | 518 |
| | | LO PR | 112 | 119 | 130 | 139 | 118 | 126 | 137 | 146 | 123 | 131 | 143 | 152 | 129 | 137 | **150** | 160 | 135 | 144 | 157 | 168 | 140 | 149 | 163 | 173 |
| | 1139 | MBh | 36.4 | 37.1 | 39.7 | 42.4 | 35.5 | 36.3 | 38.8 | 41.4 | 34.7 | 35.4 | 37.8 | 40.5 | 33.8 | 34.6 | 36.9 | 39.5 | 32.1 | 32.8 | 35.1 | 37.5 | 29.8 | 30.4 | 32.5 | 34.7 |
| | | S/T | 0.86 | 0.80 | 0.65 | 0.49 | 0.89 | 0.83 | 0.68 | 0.51 | 0.91 | 0.85 | 0.70 | 0.52 | 0.94 | 0.88 | 0.72 | 0.54 | 0.98 | 0.92 | 0.75 | 0.56 | 0.98 | 0.92 | 0.75 | 0.56 |
| | | Δ T | 25 | 24 | 21 | 17 | 25 | 24 | 21 | 17 | 25 | 24 | 21 | 17 | 26 | 25 | 21 | 17 | 25 | 24 | 21 | 17 | 24 | 23 | 20 | 16 |
| | | kW | 2.57 | 2.63 | 2.71 | 2.80 | 2.77 | 2.83 | 2.92 | 3.02 | 2.95 | 3.01 | 3.11 | 3.21 | 3.10 | 3.17 | 3.28 | 3.39 | 3.23 | 3.31 | 3.42 | 3.53 | 3.35 | 3.42 | 3.54 | 3.66 |
| | | Amps | 10.4 | 10.6 | 10.9 | 11.3 | 11.2 | 11.4 | 11.8 | 12.2 | 12.1 | 12.4 | 12.8 | 13.3 | 12.9 | 13.2 | 13.7 | 14.2 | 13.7 | 14.1 | 14.5 | 15.1 | 14.5 | 14.9 | 15.4 | 15.9 |
| | | HI PR | 235 | 253 | 267 | 278 | 263 | 283 | 299 | 312 | 300 | 322 | 340 | 355 | 341 | 367 | 388 | 404 | 384 | 413 | 436 | 455 | 424 | 456 | 482 | 503 |
| | | LO PR | 109 | 116 | 126 | 134 | 115 | 122 | 133 | 142 | 119 | 127 | 139 | 148 | 125 | 133 | 146 | 155 | 131 | 140 | 153 | 163 | 136 | 145 | 158 | 168 |
| 85 | 1461 | MBh | 41.3 | 42.1 | 44.1 | 47.0 | 40.3 | 41.1 | 43.0 | 45.9 | 39.4 | 40.1 | 42.0 | 44.8 | 38.4 | 39.1 | 41.0 | 43.7 | 36.5 | 37.2 | 38.9 | 41.5 | 33.8 | 34.4 | 36.1 | 38.5 |
| | | S/T | 0.98 | 0.94 | 0.85 | 0.69 | 1.00 | 0.98 | 0.88 | 0.72 | 1.00 | 1.00 | 0.90 | 0.73 | 1.00 | 1.00 | 0.93 | 0.76 | 1.00 | 1.00 | 0.97 | 0.79 | 1.00 | 1.00 | 0.98 | 0.79 |
| | | Δ T | 25 | 25 | 24 | 20 | 25 | 25 | 24 | 21 | 25 | 25 | 24 | 21 | 24 | 25 | 24 | 21 | 23 | 23 | 24 | 21 | 21 | 22 | 22 | 19 |
| | | kW | 2.68 | 2.74 | 2.82 | 2.92 | 2.89 | 2.95 | 3.05 | 3.15 | 3.07 | 3.14 | 3.24 | 3.35 | 3.24 | 3.31 | 3.42 | 3.53 | 3.37 | 3.45 | 3.57 | 3.69 | 3.49 | 3.57 | 3.69 | 3.82 |
| | | Amps | 10.8 | 11.1 | 11.4 | 11.9 | 11.7 | 12.0 | 12.3 | 12.8 | 12.7 | 13.0 | 13.4 | 13.9 | 13.5 | 13.8 | 14.3 | 14.8 | 14.4 | 14.7 | 15.2 | 15.8 | 15.2 | 15.6 | 16.1 | 16.7 |
| | | HI PR | 247 | 266 | 281 | 293 | 277 | 298 | 315 | 328 | 315 | 339 | 358 | 373 | 359 | 386 | 408 | 425 | 404 | 434 | 459 | 478 | 446 | 480 | 507 | 529 |
| | | LO PR | 114 | 122 | 133 | 141 | 121 | 128 | 140 | 149 | 126 | 134 | 146 | 155 | 132 | 140 | 153 | 163 | 138 | 147 | 160 | 171 | 143 | 152 | 166 | 177 |
| | 1300 | MBh | 40.1 | 40.9 | 42.8 | 45.6 | 39.1 | 39.9 | 41.8 | 44.6 | 38.2 | 39.0 | 40.8 | 43.5 | 37.3 | 38.0 | 39.8 | 42.5 | 35.4 | 36.1 | 37.8 | 40.3 | 32.8 | 33.4 | 35.0 | 37.4 |
| | | S/T | 0.93 | 0.90 | 0.81 | 0.66 | 0.97 | 0.93 | 0.84 | 0.68 | 0.99 | 0.96 | 0.86 | 0.70 | 1.00 | 0.99 | 0.89 | 0.72 | 1.00 | 1.00 | 0.92 | 0.75 | 1.00 | 1.00 | 0.93 | 0.76 |
| | | Δ T | 26 | 26 | 25 | 21 | 27 | 26 | 25 | 22 | 27 | 26 | 25 | 22 | 26 | 27 | 25 | 22 | 25 | 26 | 25 | 21 | 23 | 24 | 23 | 20 |
| | | kW | 2.66 | 2.72 | 2.80 | 2.89 | 2.87 | 2.93 | 3.02 | 3.12 | 3.05 | 3.12 | 3.22 | 3.33 | 3.21 | 3.28 | 3.39 | 3.50 | 3.35 | 3.42 | 3.54 | 3.66 | 3.46 | 3.54 | 3.66 | 3.79 |
| | | Amps | 10.7 | 11.0 | 11.3 | 11.7 | 11.6 | 11.9 | 12.2 | 12.7 | 12.6 | 12.9 | 13.3 | 13.8 | 13.4 | 13.7 | 14.2 | 14.7 | 14.2 | 14.6 | 15.1 | 15.6 | 15.1 | 15.4 | 15.9 | 16.5 |
| | | HI PR | 244 | 263 | 278 | 290 | 274 | 295 | 312 | 325 | 312 | 336 | 354 | 370 | 355 | 382 | 404 | 421 | 400 | 430 | 454 | 474 | 442 | 475 | 502 | 523 |
| | | LO PR | 113 | 120 | 131 | 140 | 120 | 127 | 139 | 148 | 124 | 132 | 144 | 154 | 131 | 139 | 152 | 161 | 137 | 146 | 159 | 169 | 141 | 151 | 164 | 175 |
| | 1139 | MBh | 37.0 | 37.7 | 39.5 | 42.1 | 36.1 | 36.8 | 38.6 | 41.2 | 35.3 | 36.0 | 37.7 | 40.2 | 34.4 | 35.1 | 36.7 | 39.2 | 32.7 | 33.3 | 34.9 | 37.2 | 30.3 | 30.9 | 32.3 | 34.5 |
| | | S/T | 0.90 | 0.87 | 0.78 | 0.64 | 0.93 | 0.90 | 0.81 | 0.66 | 0.96 | 0.92 | 0.83 | 0.67 | 0.99 | 0.95 | 0.86 | 0.70 | 1.00 | 0.99 | 0.89 | 0.72 | 1.00 | 1.00 | 0.90 | 0.73 |
| | | Δ T | 27 | 26 | 25 | 22 | 27 | 27 | 25 | 22 | 27 | 27 | 25 | 22 | 27 | 27 | 25 | 22 | 26 | 27 | 25 | 22 | 24 | 25 | 23 | 20 |
| | | kW | 2.59 | 2.65 | 2.73 | 2.82 | 2.80 | 2.86 | 2.95 | 3.04 | 2.97 | 3.04 | 3.14 | 3.24 | 3.13 | 3.20 | 3.30 | 3.41 | 3.26 | 3.33 | 3.45 | 3.56 | 3.38 | 3.45 | 3.57 | 3.69 |
| | | Amps | 10.5 | 10.7 | 11.0 | 11.4 | 11.3 | 11.5 | 11.9 | 12.3 | 12.2 | 12.5 | 12.9 | 13.4 | 13.0 | 13.3 | 13.8 | 14.3 | 13.9 | 14.2 | 14.7 | 15.2 | 14.7 | 15.0 | 15.5 | 16.1 |
| | | HI PR | 237 | 255 | 269 | 281 | 266 | 286 | 302 | 315 | 303 | 326 | 344 | 359 | 345 | 371 | 392 | 408 | 388 | 417 | 441 | 460 | 428 | 461 | 487 | 508 |
| | | LO PR | 110 | 117 | 127 | 136 | 116 | 123 | 135 | 143 | 121 | 128 | 140 | 149 | 127 | 135 | 147 | 157 | 133 | 141 | 154 | 164 | 137 | 146 | 159 | 170 |

IDB = Entering Indoor Dry Bulb Temperature — Shaded area reflects AHRI (TVA) conditions — KW = Total system power

High and low pressures are measured at the liquid and suction access fittings. — Amps: Unit amps (comp.+ evaporator + condenser fan motors)

Design Subcooling, 10 ±2 °F @ liquid access fitting connection AHRI 95 test conditions. Design Superheat 9 ±2°F @ compressor suction access fitting connection.

# EXPANDED COOLING DATA — GPH1448H41A

| | | | Outdoor Ambient Temperature | | | | | | | | | | | | | | | | | | | | | | | |
|---|---|---|---|---|---|---|---|---|---|---|---|---|---|---|---|---|---|---|---|---|---|---|---|---|---|---|
| | | | 65 | | | | 75 | | | | 85 | | | | 95 | | | | 105 | | | | 115 | | | |
| | | | Entering Indoor Wet Bulb Temperature | | | | | | | | | | | | | | | | | | | | | | | |
| IDB | Airflow | | 59 | 63 | 67 | 71 | 59 | 63 | 67 | 71 | 59 | 63 | 67 | 71 | 59 | 63 | 67 | 71 | 59 | 63 | 67 | 71 | 59 | 63 | 67 | 71 |
| 70 | 1798 | MBh | 45.1 | 46.7 | 51.2 | - | 44.0 | 45.6 | 50.0 | - | 43.0 | 44.5 | 48.8 | - | 41.9 | 43.5 | 47.6 | - | 39.8 | 41.3 | 45.2 | - | 36.9 | 38.2 | 41.9 | - |
| | | S/T | 0.77 | 0.65 | 0.45 | - | 0.80 | 0.67 | 0.46 | - | 0.82 | 0.69 | 0.48 | - | 0.85 | 0.71 | 0.49 | - | 0.88 | 0.74 | 0.51 | - | 0.89 | 0.74 | 0.51 | - |
| | | ΔT | 18 | 15 | 12 | - | 18 | 16 | 12 | - | 18 | 16 | 12 | - | 18 | 16 | 12 | - | 18 | 16 | 12 | - | 17 | 15 | 11 | - |
| | | kW | 2.99 | 3.05 | 3.15 | - | 3.22 | 3.28 | 3.39 | - | 3.42 | 3.49 | 3.60 | - | 3.59 | 3.67 | 3.79 | - | 3.74 | 3.83 | 3.95 | - | 3.87 | 3.96 | 4.09 | - |
| | | Amps | 12.9 | 13.1 | 13.5 | - | 13.8 | 14.1 | 14.5 | - | 14.9 | 15.2 | 15.6 | - | 15.8 | 16.1 | 16.6 | - | 16.7 | 17.1 | 17.6 | - | 17.6 | 18.0 | 18.5 | - |
| | | HI PR | 242 | 261 | 275 | - | 272 | 292 | 309 | - | 309 | 332 | 351 | - | 352 | 379 | 400 | - | 396 | 426 | 450 | - | 437 | 471 | 497 | - |
| | | LO PR | 109 | 116 | 127 | - | 116 | 123 | 134 | - | 120 | 128 | 139 | - | 126 | 134 | 146 | - | 132 | 141 | 154 | - | 137 | 145 | 159 | - |
| | 1600 | MBh | 43.8 | 45.4 | 49.7 | - | 42.7 | 44.3 | 48.5 | - | 41.7 | 43.2 | 47.4 | - | 40.7 | 42.2 | 46.2 | - | 38.7 | 40.1 | 43.9 | - | 35.8 | 37.1 | 40.7 | - |
| | | S/T | 0.74 | 0.62 | 0.43 | - | 0.77 | 0.64 | 0.44 | - | 0.79 | 0.66 | 0.45 | - | 0.81 | 0.68 | 0.47 | - | 0.84 | 0.70 | 0.49 | - | 0.85 | 0.71 | 0.49 | - |
| | | ΔT | 19 | 16 | 12 | - | 19 | 16 | 12 | - | 19 | 16 | 12 | - | 19 | 16 | 12 | - | 19 | 16 | 12 | - | 17 | 15 | 11 | - |
| | | kW | 2.97 | 3.03 | 3.12 | - | 3.19 | 3.26 | 3.36 | - | 3.39 | 3.46 | 3.57 | - | 3.56 | 3.64 | 3.76 | - | 3.71 | 3.80 | 3.92 | - | 3.84 | 3.93 | 4.06 | - |
| | | Amps | 12.8 | 13.0 | 13.4 | - | 13.7 | 14.0 | 14.4 | - | 14.7 | 15.1 | 15.5 | - | 15.6 | 16.0 | 16.5 | - | 16.5 | 16.9 | 17.4 | - | 17.4 | 17.8 | 18.4 | - |
| | | HI PR | 240 | 258 | 272 | - | 269 | 289 | 306 | - | 306 | 329 | 348 | - | 348 | 375 | 396 | - | 392 | 422 | 445 | - | 433 | 466 | 492 | - |
| | | LO PR | 108 | 115 | 126 | - | 114 | 122 | 133 | - | 119 | 126 | 138 | - | 125 | 133 | 145 | - | 131 | 139 | 152 | - | 135 | 144 | 157 | - |
| | 1402 | MBh | 40.4 | 41.9 | 45.9 | - | 39.5 | 40.9 | 44.8 | - | 38.5 | 39.9 | 43.7 | - | 37.6 | 38.9 | 42.7 | - | 35.7 | 37.0 | 40.5 | - | 33.1 | 34.3 | 37.5 | - |
| | | S/T | 0.71 | 0.59 | 0.41 | - | 0.74 | 0.62 | 0.43 | - | 0.76 | 0.63 | 0.44 | - | 0.78 | 0.65 | 0.45 | - | 0.81 | 0.68 | 0.47 | - | 0.82 | 0.68 | 0.47 | - |
| | | ΔT | 19 | 16 | 12 | - | 19 | 17 | 13 | - | 19 | 17 | 13 | - | 19 | 17 | 13 | - | 19 | 16 | 12 | - | 18 | 15 | 12 | - |
| | | kW | 2.90 | 2.96 | 3.05 | - | 3.11 | 3.18 | 3.28 | - | 3.31 | 3.38 | 3.49 | - | 3.48 | 3.55 | 3.67 | - | 3.62 | 3.70 | 3.82 | - | 3.75 | 3.83 | 3.96 | - |
| | | Amps | 12.5 | 12.7 | 13.1 | - | 13.3 | 13.6 | 14.0 | - | 14.4 | 14.7 | 15.1 | - | 15.2 | 15.6 | 16.1 | - | 16.1 | 16.5 | 17.0 | - | 17.0 | 17.4 | 17.9 | - |
| | | HI PR | 233 | 250 | 264 | - | 261 | 281 | 296 | - | 297 | 319 | 337 | - | 338 | 364 | 384 | - | 380 | 409 | 432 | - | 420 | 452 | 477 | - |
| | | LO PR | 105 | 112 | 122 | - | 111 | 118 | 129 | - | 115 | 123 | 134 | - | 121 | 129 | 141 | - | 127 | 135 | 147 | - | 131 | 140 | 153 | - |
| 75 | 1798 | MBh | 45.8 | 47.2 | 51.1 | 54.8 | 44.8 | 46.1 | 49.9 | 53.6 | 43.7 | 45.0 | 48.7 | 52.3 | 42.6 | 43.9 | 47.5 | 51.0 | 40.5 | 41.7 | 45.1 | 48.5 | 37.5 | 38.6 | 41.8 | 44.9 |
| | | S/T | 0.88 | 0.79 | 0.60 | 0.38 | 0.91 | 0.82 | 0.62 | 0.40 | 0.94 | 0.84 | 0.63 | 0.41 | 0.97 | 0.86 | 0.65 | 0.42 | 1.00 | 0.90 | 0.68 | 0.44 | 1.00 | 0.90 | 0.68 | 0.44 |
| | | ΔT | 21 | 19 | 16 | 11 | 21 | 19 | 16 | 11 | 21 | 19 | 16 | 11 | 21 | 19 | 16 | 11 | 21 | 19 | 16 | 11 | 19 | 18 | 15 | 10 |
| | | kW | 3.01 | 3.08 | 3.17 | 3.27 | 3.24 | 3.31 | 3.42 | 3.53 | 3.45 | 3.52 | 3.63 | 3.75 | 3.62 | 3.70 | 3.82 | 3.95 | 3.78 | 3.86 | 3.99 | 4.12 | 3.91 | 3.99 | 4.13 | 4.27 |
| | | Amps | 13.0 | 13.2 | 13.6 | 14.1 | 13.9 | 14.2 | 14.6 | 15.1 | 15.0 | 15.3 | 15.8 | 16.3 | 15.9 | 16.3 | 16.7 | 17.3 | 16.8 | 17.2 | 17.7 | 18.4 | 17.7 | 18.1 | 18.7 | 19.4 |
| | | HI PR | 245 | 263 | 278 | 290 | 274 | 295 | 312 | 325 | 312 | 336 | 355 | 370 | 355 | 383 | 404 | 421 | 400 | 430 | 454 | 474 | 442 | 476 | 502 | 524 |
| | | LO PR | 110 | 118 | 128 | 137 | 117 | 124 | 136 | 144 | 121 | 129 | 141 | 150 | 127 | 136 | 148 | 158 | 134 | 142 | 155 | 165 | 138 | 147 | 160 | 171 |
| | 1600 | MBh | 44.5 | 45.8 | 49.6 | 53.2 | 43.5 | 44.8 | 48.4 | 52.0 | 42.4 | 43.7 | 47.3 | 50.8 | 41.4 | **42.6** | 46.1 | 49.5 | 39.3 | 40.5 | 43.8 | 47.0 | 36.4 | 37.5 | 40.6 | 43.6 |
| | | S/T | 0.84 | 0.75 | 0.57 | 0.37 | 0.87 | 0.78 | 0.59 | 0.38 | 0.89 | 0.80 | 0.60 | 0.39 | 0.92 | **0.82** | 0.62 | 0.40 | 0.96 | 0.86 | 0.65 | 0.42 | 0.96 | 0.86 | 0.65 | 0.42 |
| | | ΔT | 21 | 20 | 16 | 11 | 22 | 20 | 16 | 11 | 22 | 20 | 16 | 11 | 22 | **20** | 17 | 11 | 22 | 20 | 16 | 11 | 20 | 19 | 15 | 11 |
| | | kW | 2.99 | 3.05 | 3.15 | 3.25 | 3.22 | 3.29 | 3.39 | 3.50 | 3.42 | 3.49 | 3.60 | 3.72 | 3.59 | **3.67** | 3.79 | 3.92 | 3.75 | 3.83 | 3.95 | 4.09 | 3.88 | 3.96 | 4.09 | 4.23 |
| | | Amps | 12.9 | 13.1 | 13.5 | 14.0 | 13.8 | 14.1 | 14.5 | 15.0 | 14.9 | 15.2 | 15.6 | 16.2 | 15.8 | **16.1** | 16.6 | 17.2 | 16.7 | 17.1 | 17.6 | 18.2 | 17.6 | 18.0 | 18.5 | 19.2 |
| | | HI PR | 242 | 261 | 275 | 287 | 272 | 292 | 309 | 322 | 309 | 333 | 351 | 366 | 352 | **379** | 400 | 417 | 396 | 426 | 450 | 469 | 437 | 471 | 497 | 519 |
| | | LO PR | 109 | 116 | 127 | 135 | 116 | 123 | 134 | 143 | 120 | 128 | 139 | 149 | 126 | **134** | 147 | 156 | 132 | 141 | 154 | 164 | 137 | 145 | 159 | 169 |
| | 1402 | MBh | 41.1 | 42.3 | 45.8 | 49.1 | 40.1 | 41.3 | 44.7 | 48.0 | 39.2 | 40.3 | 43.7 | 46.8 | 38.2 | 39.3 | 42.6 | 45.7 | 36.3 | 37.4 | 40.5 | 43.4 | 33.6 | 34.6 | 37.5 | 40.2 |
| | | S/T | 0.81 | 0.72 | 0.55 | 0.35 | 0.84 | 0.75 | 0.57 | 0.37 | 0.86 | 0.77 | 0.58 | 0.37 | 0.89 | 0.79 | 0.60 | 0.39 | 0.92 | 0.82 | 0.62 | 0.40 | 0.93 | 0.83 | 0.63 | 0.40 |
| | | ΔT | 22 | 20 | 16 | 11 | 22 | 20 | 17 | 12 | 22 | 20 | 17 | 12 | 22 | 20 | 17 | 12 | 22 | 20 | 17 | 11 | 20 | 19 | 15 | 11 |
| | | kW | 2.92 | 2.98 | 3.07 | 3.17 | 3.14 | 3.21 | 3.31 | 3.41 | 3.33 | 3.41 | 3.52 | 3.63 | 3.51 | 3.58 | 3.70 | 3.82 | 3.65 | 3.73 | 3.85 | 3.98 | 3.78 | 3.86 | 3.99 | 4.12 |
| | | Amps | 12.6 | 12.8 | 13.2 | 13.6 | 13.5 | 13.7 | 14.1 | 14.6 | 14.5 | 14.8 | 15.2 | 15.8 | 15.4 | 15.7 | 16.2 | 16.7 | 16.3 | 16.6 | 17.1 | 17.7 | 17.1 | 17.5 | 18.1 | 18.7 |
| | | HI PR | 235 | 253 | 267 | 278 | 264 | 284 | 300 | 312 | 300 | 323 | 341 | 355 | 341 | 367 | 388 | 405 | 384 | 413 | 436 | 455 | 424 | 457 | 482 | 503 |
| | | LO PR | 106 | 113 | 123 | 131 | 112 | 119 | 130 | 139 | 116 | 124 | 135 | 144 | 122 | 130 | 142 | 151 | 128 | 136 | 149 | 159 | 133 | 141 | 154 | 164 |

IDB = Entering Indoor Dry Bulb Temperature
Shaded area reflects ACCA (TVA) conditions
KW = Total system power
High and low pressures are measured at the liquid and suction access fittings.
Amps: Unit amps (comp.+ evaporator + condenser fan motors)
Design Subcooling, 10 ±2 °F @ liquid access fitting connection AHRI 95 test conditions. Design Superheat 9 ±2°F @ compressor suction access fitting connection.

# EXPANDED COOLING DATA — GPH1448H41A (CONT.)

| | | | Outdoor Ambient Temperature | | | | | | | | | | | | | | | | | | | | | | | |
|---|---|---|---|---|---|---|---|---|---|---|---|---|---|---|---|---|---|---|---|---|---|---|---|---|---|---|
| | | | 65 | | | | 75 | | | | 85 | | | | 95 | | | | 105 | | | | 115 | | | |
| | | | Entering Indoor Wet Bulb Temperature | | | | | | | | | | | | | | | | | | | | | | | |
| IDB | Airflow | | 59 | 63 | 67 | 71 | 59 | 63 | 67 | 71 | 59 | 63 | 67 | 71 | 59 | 63 | 67 | 71 | 59 | 63 | 67 | 71 | 59 | 63 | 67 | 71 |
| 80 | 1798 | MBh | 46.7 | 47.7 | 50.9 | 54.4 | 45.6 | 46.6 | 49.7 | 53.2 | 44.5 | 45.5 | 48.6 | 51.9 | 43.4 | 44.3 | 47.4 | 50.6 | 41.2 | 42.1 | 45.0 | 48.1 | 38.2 | 39.0 | 41.7 | 44.6 |
| | | S/T | 0.97 | 0.91 | 0.74 | 0.55 | 1.00 | 0.94 | 0.76 | 0.57 | 1.00 | 0.96 | 0.78 | 0.59 | 1.00 | 1.00 | 0.81 | 0.60 | 1.00 | 1.00 | 0.84 | 0.63 | 1.00 | 1.00 | 0.85 | 0.63 |
| | | Δ T | 23 | 22 | 19 | 15 | 23 | 22 | 19 | 16 | 23 | 22 | 19 | 16 | 22 | 23 | 20 | 16 | 21 | 22 | 19 | 15 | 20 | 20 | 18 | 14 |
| | | kW | 3.04 | 3.10 | 3.20 | 3.30 | 3.27 | 3.34 | 3.45 | 3.56 | 3.47 | 3.55 | 3.66 | 3.78 | 3.65 | 3.73 | 3.86 | 3.99 | 3.81 | 3.89 | 4.02 | 4.16 | 3.94 | 4.03 | 4.16 | 4.30 |
| | | Amps | 13.1 | 13.4 | 13.7 | 14.2 | 14.0 | 14.3 | 14.7 | 15.2 | 15.1 | 15.4 | 15.9 | 16.4 | 16.0 | 16.4 | 16.9 | 17.5 | 17.0 | 17.4 | 17.9 | 18.5 | 17.9 | 18.3 | 18.9 | 19.5 |
| | | HI PR | 247 | 266 | 281 | 293 | 277 | 298 | 315 | 329 | 315 | 339 | 358 | 374 | 359 | 386 | 408 | 426 | 404 | 435 | 459 | 479 | 446 | 480 | 507 | 529 |
| | | LO PR | 112 | 119 | 130 | 138 | 118 | 125 | 137 | 146 | 123 | 130 | 142 | 152 | 129 | 137 | 149 | 159 | 135 | 143 | 157 | 167 | 140 | 148 | 162 | 173 |
| | 1600 | MBh | 45.3 | 46.3 | 49.5 | 52.9 | 44.2 | 45.2 | 48.3 | 51.6 | 43.2 | 44.1 | 47.2 | 50.4 | 42.1 | 43.1 | **46.0** | 49.2 | 40.0 | 40.9 | 43.7 | 46.7 | 37.1 | 37.9 | 40.5 | 43.3 |
| | | S/T | 0.92 | 0.86 | 0.70 | 0.53 | 0.95 | 0.90 | 0.73 | 0.54 | 0.98 | 0.92 | 0.75 | 0.56 | 1.00 | 0.95 | **0.77** | 0.58 | 1.00 | 0.98 | 0.80 | 0.60 | 1.00 | 0.99 | 0.81 | 0.60 |
| | | Δ T | 24 | 23 | 20 | 16 | 24 | 23 | 20 | 16 | 24 | 23 | 20 | 16 | 24 | 23 | **20** | 16 | 23 | 23 | 20 | 16 | 21 | 22 | 19 | 15 |
| | | kW | 3.01 | 3.08 | 3.17 | 3.27 | 3.24 | 3.31 | 3.42 | 3.53 | 3.45 | 3.52 | 3.63 | 3.75 | 3.62 | 3.70 | **3.83** | 3.95 | 3.78 | 3.86 | 3.99 | 4.12 | 3.91 | 3.99 | 4.13 | 4.27 |
| | | Amps | 13.0 | 13.2 | 13.6 | 14.1 | 13.9 | 14.2 | 14.6 | 15.1 | 15.0 | 15.3 | 15.8 | 16.3 | 15.9 | 16.3 | **16.8** | 17.3 | 16.8 | 17.2 | 17.7 | 18.4 | 17.7 | 18.1 | 18.7 | 19.4 |
| | | HI PR | 245 | 263 | 278 | 290 | 274 | 295 | 312 | 325 | 312 | 336 | 355 | 370 | 356 | 383 | **404** | 421 | 400 | 430 | 455 | 474 | 442 | 476 | 502 | 524 |
| | | LO PR | 110 | 118 | 128 | 137 | 117 | 124 | 136 | 144 | 121 | 129 | 141 | 150 | 127 | 136 | **148** | 158 | 134 | 142 | 155 | 165 | 138 | 147 | 160 | 171 |
| | 1402 | MBh | 41.8 | 42.7 | 45.6 | 48.8 | 40.8 | 41.7 | 44.6 | 47.7 | 39.9 | 40.7 | 43.5 | 46.5 | 38.9 | 39.7 | 42.5 | 45.4 | 36.9 | 37.8 | 40.3 | 43.1 | 34.2 | 35.0 | 37.4 | 39.9 |
| | | S/T | 0.89 | 0.83 | 0.68 | 0.51 | 0.92 | 0.86 | 0.70 | 0.53 | 0.94 | 0.89 | 0.72 | 0.54 | 0.97 | 0.91 | 0.74 | 0.56 | 1.01 | 0.95 | 0.77 | 0.58 | 1.02 | 0.96 | 0.78 | 0.58 |
| | | Δ T | 24 | 23 | 20 | 16 | 25 | 24 | 21 | 16 | 25 | 24 | 21 | 16 | 25 | 24 | 21 | 17 | 24 | 23 | 20 | 16 | 23 | 22 | 19 | 15 |
| | | kW | 2.94 | 3.00 | 3.10 | 3.19 | 3.16 | 3.23 | 3.33 | 3.44 | 3.36 | 3.43 | 3.54 | 3.66 | 3.53 | 3.61 | 3.73 | 3.85 | 3.68 | 3.76 | 3.89 | 4.02 | 3.81 | 3.89 | 4.02 | 4.16 |
| | | Amps | 12.7 | 12.9 | 13.3 | 13.7 | 13.6 | 13.9 | 14.3 | 14.7 | 14.6 | 14.9 | 15.4 | 15.9 | 15.5 | 15.8 | 16.3 | 16.9 | 16.4 | 16.8 | 17.3 | 17.9 | 17.3 | 17.7 | 18.2 | 18.9 |
| | | HI PR | 237 | 255 | 270 | 281 | 266 | 286 | 303 | 316 | 303 | 326 | 344 | 359 | 345 | 371 | 392 | 409 | 388 | 417 | 441 | 460 | 429 | 461 | 487 | 508 |
| | | LO PR | 107 | 114 | 124 | 133 | 113 | 120 | 132 | 140 | 118 | 125 | 137 | 146 | 124 | 132 | 144 | 153 | 130 | 138 | 150 | 160 | 134 | 143 | 156 | 166 |
| 85 | 1798 | MBh | 47.5 | 48.4 | 50.7 | 54.1 | 46.4 | 47.3 | 49.5 | 52.8 | 45.3 | 46.1 | 48.3 | 51.6 | 44.2 | 45.0 | 47.1 | 50.3 | 42.0 | 42.8 | 44.8 | 47.8 | 38.9 | 39.6 | 41.5 | 44.3 |
| | | S/T | 1.00 | 0.98 | 0.88 | 0.72 | 1.00 | 1.00 | 0.91 | 0.74 | 1.00 | 1.00 | 0.94 | 0.76 | 1.00 | 1.00 | 0.97 | 0.78 | 1.00 | 1.00 | 1.00 | 0.81 | 1.00 | 1.00 | 1.00 | 0.82 |
| | | Δ T | 24 | 24 | 23 | 20 | 24 | 24 | 23 | 20 | 23 | 24 | 23 | 20 | 23 | 23 | 23 | 20 | 21 | 22 | 23 | 20 | 20 | 20 | 21 | 19 |
| | | kW | 3.06 | 3.13 | 3.22 | 3.33 | 3.29 | 3.37 | 3.47 | 3.59 | 3.50 | 3.58 | 3.69 | 3.82 | 3.68 | 3.77 | 3.89 | 4.02 | 3.84 | 3.92 | 4.05 | 4.19 | 3.97 | 4.06 | 4.20 | 4.34 |
| | | Amps | 13.2 | 13.5 | 13.9 | 14.3 | 14.1 | 14.4 | 14.9 | 15.4 | 15.2 | 15.6 | 16.0 | 16.6 | 16.2 | 16.5 | 17.0 | 17.6 | 17.1 | 17.5 | 18.0 | 18.7 | 18.0 | 18.5 | 19.0 | 19.7 |
| | | HI PR | 250 | 269 | 284 | 296 | 280 | 301 | 318 | 332 | 318 | 343 | 362 | 377 | 363 | 390 | 412 | 430 | 408 | 439 | 464 | 484 | 451 | 485 | 512 | 534 |
| | | LO PR | 113 | 120 | 131 | 139 | 119 | 127 | 138 | 147 | 124 | 132 | 144 | 153 | 130 | 138 | 151 | 161 | 136 | 145 | 158 | 169 | 141 | 150 | 164 | 174 |
| | 1600 | MBh | 46.1 | 47.0 | 49.2 | 52.5 | 45.0 | 45.9 | 48.1 | 51.3 | 43.9 | 44.8 | 46.9 | 50.1 | 42.9 | 43.7 | 45.8 | 48.8 | 40.7 | 41.5 | 43.5 | 46.4 | 37.7 | 38.5 | 40.3 | 43.0 |
| | | S/T | 0.97 | 0.93 | 0.84 | 0.68 | 1.00 | 0.97 | 0.87 | 0.71 | 1.00 | 0.99 | 0.89 | 0.73 | 1.00 | 1.00 | 0.92 | 0.75 | 1.00 | 1.00 | 0.96 | 0.78 | 1.00 | 1.00 | 0.97 | 0.78 |
| | | Δ T | 26 | 25 | 24 | 21 | 26 | 25 | 24 | 21 | 25 | 25 | 24 | 21 | 25 | 25 | 24 | 21 | 23 | 24 | 24 | 21 | 22 | 22 | 22 | 19 |
| | | kW | 3.04 | 3.10 | 3.20 | 3.30 | 3.27 | 3.34 | 3.45 | 3.56 | 3.47 | 3.55 | 3.66 | 3.78 | 3.65 | 3.73 | 3.86 | 3.99 | 3.81 | 3.89 | 4.02 | 4.16 | 3.94 | 4.03 | 4.16 | 4.30 |
| | | Amps | 13.1 | 13.4 | 13.7 | 14.2 | 14.0 | 14.3 | 14.7 | 15.2 | 15.1 | 15.4 | 15.9 | 16.4 | 16.0 | 16.4 | 16.9 | 17.5 | 17.0 | 17.4 | 17.9 | 18.5 | 17.9 | 18.3 | 18.9 | 19.5 |
| | | HI PR | 247 | 266 | 281 | 293 | 277 | 298 | 315 | 329 | 315 | 339 | 358 | 374 | 359 | 386 | 408 | 426 | 404 | 435 | 459 | 479 | 446 | 480 | 507 | 529 |
| | | LO PR | 112 | 119 | 130 | 138 | 118 | 125 | 137 | 146 | 123 | 130 | 142 | 152 | 129 | 137 | 149 | 159 | 135 | 143 | 157 | 167 | 140 | 148 | 162 | 173 |
| | 1402 | MBh | 42.5 | 43.4 | 45.4 | 48.5 | 41.5 | 42.4 | 44.4 | 47.3 | 40.6 | 41.3 | 43.3 | 46.2 | 39.6 | 40.3 | 42.2 | 45.1 | 37.6 | 38.3 | 40.1 | 42.8 | 34.8 | 35.5 | 37.2 | 39.7 |
| | | S/T | 0.93 | 0.90 | 0.81 | 0.66 | 0.96 | 0.93 | 0.84 | 0.68 | 0.99 | 0.95 | 0.86 | 0.70 | 1.00 | 0.99 | 0.89 | 0.72 | 1.00 | 1.00 | 0.92 | 0.75 | 1.00 | 1.00 | 0.93 | 0.76 |
| | | Δ T | 26 | 26 | 24 | 21 | 26 | 26 | 24 | 21 | 26 | 26 | 24 | 21 | 26 | 26 | 25 | 21 | 25 | 25 | 24 | 21 | 23 | 23 | 23 | 20 |
| | | kW | 2.96 | 3.03 | 3.12 | 3.22 | 3.19 | 3.26 | 3.36 | 3.47 | 3.39 | 3.46 | 3.57 | 3.69 | 3.56 | 3.64 | 3.76 | 3.89 | 3.71 | 3.79 | 3.92 | 4.05 | 3.84 | 3.93 | 4.06 | 4.19 |
| | | Amps | 12.8 | 13.0 | 13.4 | 13.9 | 13.7 | 14.0 | 14.4 | 14.9 | 14.7 | 15.0 | 15.5 | 16.0 | 15.6 | 16.0 | 16.5 | 17.0 | 16.5 | 16.9 | 17.4 | 18.0 | 17.4 | 17.8 | 18.4 | 19.0 |
| | | HI PR | 240 | 258 | 272 | 284 | 269 | 289 | 306 | 319 | 306 | 329 | 348 | 362 | 348 | 375 | 396 | 413 | 392 | 422 | 445 | 464 | 433 | 466 | 492 | 513 |
| | | LO PR | 108 | 115 | 126 | 134 | 114 | 122 | 133 | 141 | 119 | 126 | 138 | 147 | 125 | 133 | 145 | 154 | 131 | 139 | 152 | 162 | 135 | 144 | 157 | 167 |

IDB = Entering Indoor Dry Bulb Temperature — Shaded area reflects AHRI (TVA) conditions — KW = Total system power

High and low pressures are measured at the liquid and suction access fittings. — Amps: Unit amps (comp.+ evaporator + condenser fan motors)

Design Subcooling, 10 ±2 °F @ liquid access fitting connection AHRI 95 test conditions. Design Superheat 9 ±2°F @ compressor suction access fitting connection.

# EXPANDED COOLING DATA — GPH1460H41A

| | | | Outdoor Ambient Temperature | | | | | | | | | | | | | | | | | | | | | | | |
|---|---|---|---|---|---|---|---|---|---|---|---|---|---|---|---|---|---|---|---|---|---|---|---|---|---|---|
| | | | 65 | | | | 75 | | | | 85 | | | | 95 | | | | 105 | | | | 115 | | | |
| | | | Entering Indoor Wet Bulb Temperature | | | | | | | | | | | | | | | | | | | | | | | |
| IDB | Airflow | | 59 | 63 | 67 | 71 | 59 | 63 | 67 | 71 | 59 | 63 | 67 | 71 | 59 | 63 | 67 | 71 | 59 | 63 | 67 | 71 | 59 | 63 | 67 | 71 |
| 70 | 1798 | MBh | 55.9 | 57.9 | 63.4 | - | 54.6 | 56.5 | 62.0 | - | 53.3 | 55.2 | 60.5 | - | 52.0 | 53.9 | 59.0 | - | 49.4 | 51.2 | 56.1 | - | 45.7 | 47.4 | 51.9 | - |
| | | S/T | 0.71 | 0.59 | 0.41 | - | 0.74 | 0.62 | 0.43 | - | 0.76 | 0.63 | 0.44 | - | 0.78 | 0.65 | 0.45 | - | 0.81 | 0.68 | 0.47 | - | 0.82 | 0.68 | 0.47 | - |
| | | ΔT | 20 | 18 | 13 | - | 21 | 18 | 14 | - | 21 | 18 | 14 | - | 21 | 18 | 14 | - | 20 | 18 | 13 | - | 19 | 17 | 13 | - |
| | | kW | 3.69 | 3.77 | 3.90 | - | 3.99 | 4.08 | 4.22 | - | 4.25 | 4.35 | 4.49 | - | 4.48 | 4.58 | 4.74 | - | 4.68 | 4.79 | 4.95 | - | 4.85 | 4.96 | 5.13 | - |
| | | Amps | 15.6 | 15.9 | 16.4 | - | 16.8 | 17.1 | 17.7 | - | 18.1 | 18.5 | 19.1 | - | 19.3 | 19.7 | 20.4 | - | 20.5 | 20.9 | 21.6 | - | 21.6 | 22.1 | 22.8 | - |
| | | HI PR | 237 | 255 | 269 | - | 266 | 286 | 302 | - | 302 | 325 | 343 | - | 344 | 370 | 391 | - | 387 | 417 | 440 | - | 428 | 460 | 486 | - |
| | | LO PR | 107 | 114 | 124 | - | 113 | 120 | 131 | - | 118 | 125 | 137 | - | 124 | 131 | 144 | - | 130 | 138 | 150 | - | 134 | 143 | 156 | - |
| | 1600 | MBh | 54.2 | 56.2 | 61.6 | - | 53.0 | 54.9 | 60.1 | - | 51.7 | 53.6 | 58.7 | - | 50.4 | 52.3 | 57.3 | - | 47.9 | 49.7 | 54.4 | - | 44.4 | 46.0 | 50.4 | - |
| | | S/T | 0.68 | 0.57 | 0.39 | - | 0.70 | 0.59 | 0.41 | - | 0.72 | 0.60 | 0.42 | - | 0.74 | 0.62 | 0.43 | - | 0.77 | 0.65 | 0.45 | - | 0.78 | 0.65 | 0.45 | - |
| | | ΔT | 21 | 18 | 14 | - | 21 | 19 | 14 | - | 21 | 19 | 14 | - | 22 | 19 | 14 | - | 21 | 18 | 14 | - | 20 | 17 | 13 | - |
| | | kW | 3.66 | 3.74 | 3.87 | - | 3.96 | 4.04 | 4.18 | - | 4.22 | 4.31 | 4.46 | - | 4.44 | 4.55 | 4.70 | - | 4.64 | 4.75 | 4.91 | - | 4.81 | 4.92 | 5.09 | - |
| | | Amps | 15.5 | 15.8 | 16.3 | - | 16.6 | 17.0 | 17.5 | - | 18.0 | 18.4 | 18.9 | - | 19.1 | 19.6 | 20.2 | - | 20.3 | 20.8 | 21.4 | - | 21.4 | 21.9 | 22.6 | - |
| | | HI PR | 234 | 252 | 266 | - | 263 | 283 | 299 | - | 299 | 322 | 340 | - | 341 | 367 | 387 | - | 383 | 412 | 435 | - | 423 | 456 | 481 | - |
| | | LO PR | 106 | 113 | 123 | - | 112 | 119 | 130 | - | 116 | 124 | 135 | - | 122 | 130 | 142 | - | 128 | 136 | 149 | - | 133 | 141 | 154 | - |
| | 1402 | MBh | 50.1 | 51.9 | 56.8 | - | 48.9 | 50.7 | 55.5 | - | 47.7 | 49.5 | 54.2 | - | 46.6 | 48.3 | 52.9 | - | 44.2 | 45.8 | 50.2 | - | 41.0 | 42.5 | 46.5 | - |
| | | S/T | 0.65 | 0.55 | 0.38 | - | 0.68 | 0.57 | 0.39 | - | 0.70 | 0.58 | 0.40 | - | 0.72 | 0.60 | 0.42 | - | 0.75 | 0.62 | 0.43 | - | 0.75 | 0.63 | 0.43 | - |
| | | ΔT | 21 | 19 | 14 | - | 22 | 19 | 14 | - | 22 | 19 | 14 | - | 22 | 19 | 14 | - | 22 | 19 | 14 | - | 20 | 17 | 13 | - |
| | | kW | 3.57 | 3.65 | 3.77 | - | 3.86 | 3.94 | 4.07 | - | 4.11 | 4.20 | 4.34 | - | 4.33 | 4.43 | 4.58 | - | 4.52 | 4.62 | 4.78 | - | 4.68 | 4.79 | 4.95 | - |
| | | Amps | 15.1 | 15.4 | 15.9 | - | 16.2 | 16.6 | 17.1 | - | 17.5 | 17.9 | 18.5 | - | 18.6 | 19.1 | 19.7 | - | 19.8 | 20.2 | 20.8 | - | 20.9 | 21.3 | 22.0 | - |
| | | HI PR | 227 | 245 | 258 | - | 255 | 275 | 290 | - | 290 | 312 | 330 | - | 330 | 356 | 375 | - | 372 | 400 | 422 | - | 411 | 442 | 467 | - |
| | | LO PR | 103 | 109 | 120 | - | 109 | 116 | 126 | - | 113 | 120 | 131 | - | 119 | 126 | 138 | - | 124 | 132 | 144 | - | 129 | 137 | 149 | - |
| 75 | 1798 | MBh | 56.8 | 58.5 | 63.3 | 67.9 | 55.5 | 57.1 | 61.8 | 66.4 | 54.2 | 55.8 | 60.4 | 64.8 | 52.8 | 54.4 | 58.9 | 63.2 | 50.2 | 51.7 | 55.9 | 60.0 | 46.5 | 47.9 | 51.8 | 55.6 |
| | | S/T | 0.81 | 0.72 | 0.55 | 0.35 | 0.84 | 0.75 | 0.57 | 0.37 | 0.86 | 0.77 | 0.58 | 0.37 | 0.89 | 0.79 | 0.60 | 0.39 | 0.92 | 0.82 | 0.62 | 0.40 | 0.93 | 0.83 | 0.63 | 0.40 |
| | | ΔT | 24 | 22 | 18 | 12 | 24 | 22 | 18 | 12 | 24 | 22 | 18 | 12 | 24 | 22 | 18 | 12 | 24 | 22 | 18 | 12 | 22 | 20 | 17 | 12 |
| | | kW | 3.72 | 3.81 | 3.93 | 4.06 | 4.02 | 4.11 | 4.25 | 4.40 | 4.29 | 4.39 | 4.53 | 4.69 | 4.52 | 4.63 | 4.78 | 4.95 | 4.72 | 4.83 | 4.99 | 5.17 | 4.89 | 5.00 | 5.18 | 5.36 |
| | | Amps | 15.7 | 16.1 | 16.6 | 17.1 | 16.9 | 17.3 | 17.8 | 18.4 | 18.3 | 18.7 | 19.3 | 20.0 | 19.5 | 19.9 | 20.5 | 21.3 | 20.6 | 21.1 | 21.8 | 22.6 | 21.8 | 22.3 | 23.0 | 23.9 |
| | | HI PR | 239 | 257 | 272 | 283 | 268 | 289 | 305 | 318 | 305 | 328 | 347 | 362 | 348 | 374 | 395 | 412 | 391 | 421 | 444 | 463 | 432 | 465 | 491 | 512 |
| | | LO PR | 108 | 115 | 126 | 134 | 114 | 122 | 133 | 141 | 119 | 126 | 138 | 147 | 125 | 133 | 145 | 154 | 131 | 139 | 152 | 162 | 135 | 144 | 157 | 167 |
| | 1600 | MBh | 55.1 | 56.8 | 61.5 | 66.0 | 53.9 | 55.5 | 60.0 | 64.4 | 52.6 | 54.1 | 58.6 | 62.9 | 51.3 | **52.8** | 57.2 | 61.4 | 48.7 | 50.2 | 54.3 | 58.3 | 45.1 | 46.5 | 50.3 | 54.0 |
| | | S/T | 0.77 | 0.69 | 0.52 | 0.34 | 0.80 | 0.72 | 0.54 | 0.35 | 0.82 | 0.73 | 0.56 | 0.36 | 0.85 | **0.76** | 0.57 | 0.37 | 0.88 | 0.79 | 0.59 | 0.38 | 0.89 | 0.79 | 0.60 | 0.39 |
| | | ΔT | 24 | 23 | 18 | 13 | 25 | 23 | 19 | 13 | 25 | 23 | 19 | 13 | 25 | **23** | 19 | 13 | 25 | 23 | 19 | 13 | 23 | 21 | 17 | 12 |
| | | kW | 3.69 | 3.78 | 3.90 | 4.03 | 3.99 | 4.08 | 4.22 | 4.36 | 4.25 | 4.35 | 4.50 | 4.65 | 4.48 | **4.59** | 4.74 | 4.91 | 4.68 | 4.79 | 4.95 | 5.12 | 4.85 | 4.96 | 5.13 | 5.31 |
| | | Amps | 15.6 | 15.9 | 16.4 | 17.0 | 16.8 | 17.1 | 17.7 | 18.3 | 18.1 | 18.5 | 19.1 | 19.8 | 19.3 | **19.7** | 20.4 | 21.1 | 20.5 | 20.9 | 21.6 | 22.4 | 21.6 | 22.1 | 22.8 | 23.7 |
| | | HI PR | 237 | 255 | 269 | 281 | 266 | 286 | 302 | 315 | 302 | 325 | 343 | 358 | 344 | **370** | 391 | 408 | 387 | 417 | 440 | 459 | 428 | 460 | 486 | 507 |
| | | LO PR | 107 | 114 | 124 | 133 | 113 | 120 | 131 | 140 | 118 | 125 | 137 | 146 | 124 | **131** | 144 | 153 | 130 | 138 | 150 | 160 | 134 | 143 | 156 | 166 |
| | 1402 | MBh | 50.9 | 52.4 | 56.7 | 60.9 | 49.7 | 51.2 | 55.4 | 59.5 | 48.5 | 50.0 | 54.1 | 58.1 | 47.3 | 48.8 | 52.8 | 56.6 | 45.0 | 46.3 | 50.1 | 53.8 | 41.7 | 42.9 | 46.4 | 49.8 |
| | | S/T | 0.74 | 0.67 | 0.50 | 0.32 | 0.77 | 0.69 | 0.52 | 0.34 | 0.79 | 0.71 | 0.54 | 0.34 | 0.82 | 0.73 | 0.55 | 0.36 | 0.85 | 0.76 | 0.57 | 0.37 | 0.85 | 0.76 | 0.58 | 0.37 |
| | | ΔT | 25 | 23 | 19 | 13 | 25 | 23 | 19 | 13 | 25 | 23 | 19 | 13 | 25 | 23 | 19 | 13 | 25 | 23 | 19 | 13 | 23 | 22 | 18 | 12 |
| | | kW | 3.60 | 3.68 | 3.80 | 3.93 | 3.89 | 3.98 | 4.11 | 4.25 | 4.14 | 4.24 | 4.38 | 4.53 | 4.37 | 4.47 | 4.62 | 4.78 | 4.56 | 4.66 | 4.82 | 4.99 | 4.72 | 4.83 | 5.00 | 5.17 |
| | | Amps | 15.2 | 15.5 | 16.0 | 16.6 | 16.3 | 16.7 | 17.2 | 17.8 | 17.7 | 18.1 | 18.6 | 19.3 | 18.8 | 19.2 | 19.8 | 20.5 | 19.9 | 20.4 | 21.0 | 21.8 | 21.0 | 21.5 | 22.2 | 23.0 |
| | | HI PR | 230 | 247 | 261 | 272 | 258 | 277 | 293 | 305 | 293 | 315 | 333 | 347 | 334 | 359 | 379 | 396 | 376 | 404 | 427 | 445 | 415 | 447 | 471 | 492 |
| | | LO PR | 104 | 111 | 121 | 129 | 110 | 117 | 128 | 136 | 114 | 121 | 133 | 141 | 120 | 128 | 139 | 148 | 126 | 134 | 146 | 155 | 130 | 138 | 151 | 161 |

IDB = Entering Indoor Dry Bulb Temperature
Shaded area reflects ACCA (TVA) conditions
KW = Total system power
High and low pressures are measured at the liquid and suction access fittings.
Amps: Unit amps (comp.+ evaporator + condenser fan motors)
Design Subcooling, 10 ±2 °F @ liquid access fitting connection AHRI 95 test conditions. Design Superheat 9 ±2°F @ compressor suction access fitting connection.

# EXPANDED COOLING DATA — GPH1460H41A (CONT.)

| | | | Outdoor Ambient Temperature | | | | | | | | | | | | | | | | | | | | | | | |
|---|---|---|---|---|---|---|---|---|---|---|---|---|---|---|---|---|---|---|---|---|---|---|---|---|---|---|
| | | | 65 | | | | 75 | | | | 85 | | | | 95 | | | | 105 | | | | 115 | | | |
| | | | Entering Indoor Wet Bulb Temperature | | | | | | | | | | | | | | | | | | | | | | | |
| IDB | Airflow | | 59 | 63 | 67 | 71 | 59 | 63 | 67 | 71 | 59 | 63 | 67 | 71 | 59 | 63 | 67 | 71 | 59 | 63 | 67 | 71 | 59 | 63 | 67 | 71 |
| 80 | 1798 | MBh | 57.8 | 59.1 | 63.1 | 67.5 | 56.5 | 57.7 | 61.6 | 65.9 | 55.1 | 56.3 | 60.2 | 64.3 | 53.8 | 55.0 | 58.7 | 62.8 | 51.1 | 52.2 | 55.8 | 59.6 | 47.3 | 48.4 | 51.7 | 55.2 |
| | | S/T | 0.89 | 0.83 | 0.68 | 0.51 | 0.92 | 0.86 | 0.70 | 0.52 | 0.94 | 0.88 | 0.72 | 0.54 | 1.00 | 0.91 | 0.74 | 0.56 | 1.00 | 0.95 | 0.77 | 0.58 | 1.00 | 0.96 | 0.78 | 0.58 |
| | | ΔT | 26 | 25 | 22 | 17 | 27 | 25 | 22 | 18 | 27 | 25 | 22 | 18 | 27 | 26 | 22 | 18 | 26 | 25 | 22 | 18 | 24 | 24 | 21 | 16 |
| | | kW | 3.76 | 3.84 | 3.97 | 4.10 | 4.06 | 4.15 | 4.29 | 4.43 | 4.33 | 4.42 | 4.57 | 4.73 | 4.56 | 4.67 | 4.83 | 4.99 | 4.76 | 4.87 | 5.04 | 5.22 | 4.93 | 5.05 | 5.22 | 5.41 |
| | | Amps | 15.9 | 16.2 | 16.7 | 17.3 | 17.0 | 17.4 | 18.0 | 18.6 | 18.4 | 18.9 | 19.4 | 20.1 | 19.6 | 20.1 | 20.7 | 21.5 | 20.8 | 21.3 | 22.0 | 22.8 | 22.0 | 22.5 | 23.2 | 24.1 |
| | | HI PR | 242 | 260 | 274 | 286 | 271 | 292 | 308 | 321 | 308 | 332 | 350 | 365 | 351 | 378 | 399 | 416 | 395 | 425 | 449 | 468 | 436 | 470 | 496 | 517 |
| | | LO PR | 109 | 116 | 127 | 135 | 116 | 123 | 134 | 143 | 120 | 128 | 139 | 148 | 126 | 134 | 146 | 156 | 132 | 141 | 153 | 163 | 137 | 145 | 159 | 169 |
| | 1600 | MBh | 56.1 | 57.4 | 61.3 | 65.5 | 54.8 | 56.0 | 59.9 | 64.0 | 53.5 | 54.7 | 58.4 | 62.5 | 52.2 | 53.4 | **57.0** | 60.9 | 49.6 | 50.7 | 54.2 | 57.9 | 45.9 | 46.9 | 50.2 | 53.6 |
| | | S/T | 0.85 | 0.79 | 0.65 | 0.48 | 0.88 | 0.82 | 0.67 | 0.50 | 0.90 | 0.84 | 0.69 | 0.51 | 0.93 | 0.87 | **0.71** | 0.53 | 0.96 | 0.90 | 0.74 | 0.55 | 0.97 | 0.91 | 0.74 | 0.55 |
| | | ΔT | 27 | 26 | 23 | 18 | 28 | 26 | 23 | 18 | 28 | 27 | 23 | 18 | 28 | 27 | **23** | 19 | 27 | 26 | 23 | 18 | 26 | 25 | 21 | 17 |
| | | kW | 3.72 | 3.81 | 3.93 | 4.06 | 4.02 | 4.11 | 4.25 | 4.40 | 4.29 | 4.39 | 4.53 | 4.69 | 4.52 | 4.63 | **4.78** | 4.95 | 4.72 | 4.83 | 5.00 | 5.17 | 4.89 | 5.01 | 5.18 | 5.36 |
| | | Amps | 15.7 | 16.1 | 16.6 | 17.1 | 16.9 | 17.3 | 17.8 | 18.4 | 18.3 | 18.7 | 19.3 | 20.0 | 19.5 | 19.9 | **20.5** | 21.3 | 20.6 | 21.1 | 21.8 | 22.6 | 21.8 | 22.3 | 23.0 | 23.9 |
| | | HI PR | 239 | 257 | 272 | 283 | 268 | 289 | 305 | 318 | 305 | 328 | 347 | 362 | 348 | 374 | **395** | 412 | 391 | 421 | 444 | 463 | 432 | 465 | 491 | 512 |
| | | LO PR | 108 | 115 | 126 | 134 | 114 | 122 | 133 | 141 | 119 | 126 | 138 | 147 | 125 | 133 | **145** | 154 | 131 | 139 | 152 | 162 | 135 | 144 | 157 | 167 |
| | 1402 | MBh | 51.8 | 52.9 | 56.6 | 60.5 | 50.6 | 51.7 | 55.2 | 59.1 | 49.4 | 50.5 | 53.9 | 57.6 | 48.2 | 49.2 | 52.6 | 56.2 | 45.8 | 46.8 | 50.0 | 53.4 | 42.4 | 43.3 | 46.3 | 49.5 |
| | | S/T | 0.82 | 0.77 | 0.62 | 0.47 | 0.85 | 0.79 | 0.65 | 0.48 | 0.87 | 0.81 | 0.66 | 0.49 | 0.90 | 0.84 | 0.68 | 0.51 | 0.93 | 0.87 | 0.71 | 0.53 | 0.94 | 0.88 | 0.72 | 0.53 |
| | | ΔT | 28 | 27 | 23 | 18 | 28 | 27 | 23 | 19 | 28 | 27 | 23 | 19 | 28 | 27 | 24 | 19 | 28 | 27 | 23 | 19 | 26 | 25 | 22 | 17 |
| | | kW | 3.63 | 3.71 | 3.83 | 3.96 | 3.92 | 4.01 | 4.14 | 4.28 | 4.18 | 4.27 | 4.42 | 4.57 | 4.41 | 4.51 | 4.66 | 4.82 | 4.60 | 4.70 | 4.86 | 5.03 | 4.76 | 4.87 | 5.04 | 5.22 |
| | | Amps | 15.3 | 15.7 | 16.1 | 16.7 | 16.5 | 16.8 | 17.4 | 18.0 | 17.8 | 18.2 | 18.8 | 19.4 | 19.0 | 19.4 | 20.0 | 20.7 | 20.1 | 20.6 | 21.2 | 22.0 | 21.2 | 21.7 | 22.4 | 23.2 |
| | | HI PR | 232 | 250 | 264 | 275 | 260 | 280 | 296 | 309 | 296 | 319 | 336 | 351 | 337 | 363 | 383 | 400 | 379 | 408 | 431 | 450 | 419 | 451 | 476 | 497 |
| | | LO PR | 105 | 112 | 122 | 130 | 111 | 118 | 129 | 137 | 115 | 123 | 134 | 143 | 121 | 129 | 141 | 150 | 127 | 135 | 147 | 157 | 131 | 140 | 152 | 162 |
| 85 | 1798 | MBh | 58.8 | 60.0 | 62.8 | 67.0 | 57.5 | 58.6 | 61.3 | 65.4 | 56.1 | 57.2 | 59.9 | 63.9 | 54.7 | 55.8 | 58.4 | 62.3 | 52.0 | 53.0 | 55.5 | 59.2 | 48.2 | 49.1 | 51.4 | 54.8 |
| | | S/T | 0.93 | 0.90 | 0.81 | 0.66 | 0.96 | 0.93 | 0.84 | 0.68 | 0.99 | 0.95 | 0.86 | 0.70 | 1.00 | 0.99 | 0.89 | 0.72 | 1.00 | 1.00 | 0.92 | 0.75 | 1.00 | 1.00 | 0.93 | 0.75 |
| | | ΔT | 28 | 28 | 26 | 23 | 28 | 28 | 26 | 23 | 28 | 28 | 26 | 23 | 28 | 28 | 27 | 23 | 27 | 27 | 26 | 23 | 25 | 25 | 24 | 21 |
| | | kW | 3.79 | 3.87 | 4.00 | 4.13 | 4.09 | 4.18 | 4.32 | 4.47 | 4.36 | 4.46 | 4.61 | 4.77 | 4.60 | 4.71 | 4.87 | 5.04 | 4.80 | 4.91 | 5.08 | 5.26 | 4.98 | 5.09 | 5.27 | 5.45 |
| | | Amps | 16.0 | 16.3 | 16.8 | 17.4 | 17.2 | 17.6 | 18.1 | 18.8 | 18.6 | 19.0 | 19.6 | 20.3 | 19.8 | 20.3 | 20.9 | 21.7 | 21.0 | 21.5 | 22.2 | 23.0 | 22.2 | 22.7 | 23.5 | 24.3 |
| | | HI PR | 244 | 263 | 277 | 289 | 274 | 295 | 311 | 324 | 311 | 335 | 354 | 369 | 355 | 382 | 403 | 420 | 399 | 429 | 453 | 473 | 441 | 474 | 501 | 522 |
| | | LO PR | 110 | 117 | 128 | 137 | 117 | 124 | 135 | 144 | 121 | 129 | 141 | 150 | 127 | 135 | 148 | 158 | 133 | 142 | 155 | 165 | 138 | 147 | 160 | 171 |
| | 1600 | MBh | 57.1 | 58.2 | 61.0 | 65.0 | 55.8 | 56.9 | 59.6 | 63.5 | 54.5 | 55.5 | 58.1 | 62.0 | 53.1 | 54.2 | 56.7 | 60.5 | 50.5 | 51.4 | 53.9 | 57.5 | 46.7 | 47.7 | 49.9 | 53.2 |
| | | S/T | 0.89 | 0.86 | 0.77 | 0.63 | 0.92 | 0.89 | 0.80 | 0.65 | 0.94 | 0.91 | 0.82 | 0.67 | 0.97 | 0.94 | 0.85 | 0.69 | 1.00 | 0.98 | 0.88 | 0.71 | 1.00 | 0.98 | 0.89 | 0.72 |
| | | ΔT | 29 | 29 | 27 | 23 | 29 | 29 | 27 | 24 | 30 | 29 | 27 | 24 | 30 | 29 | 28 | 24 | 29 | 29 | 27 | 24 | 27 | 27 | 25 | 22 |
| | | kW | 3.76 | 3.84 | 3.97 | 4.10 | 4.06 | 4.15 | 4.29 | 4.43 | 4.33 | 4.42 | 4.57 | 4.73 | 4.56 | 4.67 | 4.83 | 4.99 | 4.76 | 4.87 | 5.04 | 5.22 | 4.93 | 5.05 | 5.22 | 5.41 |
| | | Amps | 15.9 | 16.2 | 16.7 | 17.3 | 17.0 | 17.4 | 18.0 | 18.6 | 18.4 | 18.9 | 19.4 | 20.1 | 19.6 | 20.1 | 20.7 | 21.5 | 20.8 | 21.3 | 22.0 | 22.8 | 22.0 | 22.5 | 23.2 | 24.1 |
| | | HI PR | 242 | 260 | 274 | 286 | 271 | 292 | 308 | 321 | 308 | 332 | 350 | 365 | 351 | 378 | 399 | 416 | 395 | 425 | 449 | 468 | 436 | 470 | 496 | 517 |
| | | LO PR | 109 | 116 | 127 | 135 | 116 | 123 | 134 | 143 | 120 | 128 | 139 | 148 | 126 | 134 | 146 | 156 | 132 | 141 | 153 | 163 | 137 | 145 | 159 | 169 |
| | 1402 | MBh | 52.7 | 53.7 | 56.3 | 60.0 | 51.5 | 52.5 | 55.0 | 58.6 | 50.3 | 51.2 | 53.7 | 57.2 | 49.0 | 50.0 | 52.3 | 55.8 | 46.6 | 47.5 | 49.7 | 53.1 | 43.1 | 44.0 | 46.1 | 49.1 |
| | | S/T | 0.86 | 0.83 | 0.75 | 0.60 | 0.89 | 0.86 | 0.77 | 0.63 | 0.91 | 0.88 | 0.79 | 0.64 | 0.94 | 0.91 | 0.82 | 0.66 | 0.97 | 0.94 | 0.85 | 0.69 | 0.98 | 0.95 | 0.86 | 0.69 |
| | | ΔT | 30 | 29 | 27 | 24 | 30 | 29 | 28 | 24 | 30 | 29 | 28 | 24 | 30 | 30 | 28 | 24 | 30 | 29 | 28 | 24 | 28 | 27 | 26 | 22 |
| | | kW | 3.66 | 3.74 | 3.87 | 3.99 | 3.96 | 4.04 | 4.18 | 4.32 | 4.21 | 4.31 | 4.46 | 4.61 | 4.44 | 4.54 | 4.70 | 4.86 | 4.64 | 4.74 | 4.91 | 5.08 | 4.81 | 4.92 | 5.09 | 5.26 |
| | | Amps | 15.5 | 15.8 | 16.3 | 16.8 | 16.6 | 17.0 | 17.5 | 18.1 | 18.0 | 18.4 | 18.9 | 19.6 | 19.1 | 19.6 | 20.2 | 20.9 | 20.3 | 20.7 | 21.4 | 22.2 | 21.4 | 21.9 | 22.6 | 23.4 |
| | | HI PR | 234 | 252 | 266 | 278 | 263 | 283 | 299 | 312 | 299 | 322 | 340 | 354 | 341 | 366 | 387 | 404 | 383 | 412 | 435 | 454 | 423 | 456 | 481 | 502 |
| | | LO PR | 106 | 113 | 123 | 131 | 112 | 119 | 130 | 139 | 116 | 124 | 135 | 144 | 122 | 130 | 142 | 151 | 128 | 136 | 149 | 159 | 133 | 141 | 154 | 164 |

IDB = Entering Indoor Dry Bulb Temperature — Shaded area reflects AHRI (TVA) conditions — KW = Total system power

High and low pressures are measured at the liquid and suction access fittings. — Amps: Unit amps (comp.+ evaporator + condenser fan motors)

Design Subcooling, 10 ±2 °F @ liquid access fitting connection AHRI 95 test conditions. Design Superheat 9 ±2°F @ compressor suction access fitting connection.

# EXPANDED HEATING DATA

### GPH1424H41A

| | Outdoor Ambient Temperature | | | | | | | | | | | | | | | | | |
|---|---|---|---|---|---|---|---|---|---|---|---|---|---|---|---|---|---|---|
| | 65 | 60 | 55 | 50 | 47 | 45 | 40 | 35 | 30 | 25 | 20 | 17 | 15 | 10 | 5 | 0 | -5 | -10 |
| MBh | 28.7 | 27.1 | 25.5 | 23.9 | 22.8 | 22.1 | 20.5 | 18.9 | 16.2 | 15.0 | 13.8 | 13.0 | 12.5 | 11.2 | 10.0 | 8.7 | 7.4 | 6.1 |
| T/R | 31.2 | 29.6 | 27.8 | 26.0 | 24.8 | 24.1 | 22.4 | 20.6 | 17.6 | 16.3 | 15.0 | 14.2 | 13.6 | 12.2 | 10.8 | 9.5 | 8.1 | 6.6 |
| kW | 1.86 | 1.82 | 1.78 | 1.75 | 1.73 | 1.71 | 1.67 | 1.63 | 1.65 | 1.61 | 1.58 | 1.55 | 1.54 | 1.50 | 1.46 | 1.42 | 1.38 | 1.34 |
| Amps | 9.1 | 8.4 | 7.9 | 7.5 | 7.2 | 7.1 | 6.7 | 6.4 | 6.2 | 5.9 | 5.6 | 5.5 | 5.5 | 5.2 | 4.9 | 4.6 | 4.3 | 3.9 |
| COP | 4.51 | 4.36 | 4.19 | 4.00 | 3.87 | 3.78 | 3.59 | 3.39 | 2.87 | 2.71 | 2.56 | 2.45 | 2.38 | 2.19 | 2.00 | 1.79 | 1.57 | 1.32 |
| EER | 15.4 | 14.9 | 14.3 | 13.7 | 13.2 | 12.9 | 12.3 | 11.6 | 9.8 | 9.3 | 8.7 | 8.4 | 8.1 | 7.5 | 6.8 | 6.1 | 5.4 | 4.5 |
| HI PR | 367 | 352 | 338 | 324 | 316 | 310 | 298 | 286 | 274 | 262 | 251 | 245 | 241 | 232 | 223 | 214 | 206 | 199 |
| LO PR | 142 | 132 | 123 | 113 | 107 | 103 | 95 | 84 | 76 | 68 | 60 | 56 | 54 | 45 | 39 | 33 | 29 | 23 |

### GPH1430H41A

| | Outdoor Ambient Temperature | | | | | | | | | | | | | | | | | |
|---|---|---|---|---|---|---|---|---|---|---|---|---|---|---|---|---|---|---|
| | 65 | 60 | 55 | 50 | 47 | 45 | 40 | 35 | 30 | 25 | 20 | 17 | 15 | 10 | 5 | 0 | -5 | -10 |
| MBh | 34.7 | 32.8 | 30.9 | 28.9 | 27.6 | 26.7 | 24.8 | 22.9 | 19.2 | 17.7 | 16.3 | 15.4 | 14.8 | 13.3 | 11.8 | 10.3 | 8.8 | 7.2 |
| T/R | 30.6 | 29.0 | 27.3 | 25.5 | 24.3 | 23.6 | 21.9 | 20.2 | 16.9 | 15.6 | 14.4 | 13.6 | 13.1 | 11.7 | 10.4 | 9.1 | 7.7 | 6.3 |
| kW | 2.26 | 2.22 | 2.17 | 2.13 | 2.10 | 2.08 | 2.04 | 1.99 | 1.98 | 1.93 | 1.89 | 1.86 | 1.84 | 1.79 | 1.75 | 1.70 | 1.66 | 1.61 |
| Amps | 11.0 | 10.3 | 9.7 | 9.1 | 8.8 | 8.7 | 8.2 | 7.8 | 7.5 | 7.2 | 6.9 | 6.8 | 6.7 | 6.4 | 6.0 | 5.7 | 5.3 | 4.9 |
| COP | 4.48 | 4.33 | 4.16 | 3.97 | 3.84 | 3.76 | 3.56 | 3.36 | 2.84 | 2.68 | 2.53 | 2.42 | 2.36 | 2.17 | 1.97 | 1.77 | 1.55 | 1.30 |
| EER | 15.3 | 14.8 | 14.2 | 13.6 | 13.1 | 12.8 | 12.2 | 11.5 | 9.7 | 9.2 | 8.6 | 8.3 | 8.1 | 7.4 | 6.7 | 6.0 | 5.3 | 4.5 |
| HI PR | 374 | 359 | 345 | 330 | 322 | 316 | 304 | 291 | 279 | 267 | 256 | 250 | 245 | 236 | 227 | 218 | 210 | 203 |
| LO PR | 134 | 124 | 117 | 107 | 101 | 97 | 89 | 80 | 72 | 64 | 56 | 52 | 51 | 43 | 37 | 31 | 27 | 21 |

### GPH1436H41A

| | Outdoor Ambient Temperature | | | | | | | | | | | | | | | | | |
|---|---|---|---|---|---|---|---|---|---|---|---|---|---|---|---|---|---|---|
| | 65 | 60 | 55 | 50 | 47 | 45 | 40 | 35 | 30 | 25 | 20 | 17 | 15 | 10 | 5 | 0 | -5 | -10 |
| MBh | 41.5 | 39.3 | 37.0 | 34.6 | 33.0 | 32.0 | 29.7 | 27.4 | 26.9 | 24.8 | 22.9 | 21.6 | 20.8 | 18.7 | 16.5 | 14.4 | 12.3 | 10.1 |
| T/R | 32.0 | 30.3 | 28.5 | 26.7 | 25.5 | 24.7 | 22.9 | 21.1 | 20.8 | 19.2 | 17.7 | 16.7 | 16.1 | 14.4 | 12.8 | 11.1 | 9.5 | 7.8 |
| kW | 2.74 | 2.68 | 2.63 | 2.57 | 2.54 | 2.52 | 2.47 | 2.41 | 2.64 | 2.58 | 2.52 | 2.48 | 2.46 | 2.39 | 2.33 | 2.27 | 2.21 | 2.15 |
| Amps | 13.5 | 12.6 | 11.9 | 11.2 | 10.9 | 10.7 | 10.1 | 9.7 | 9.3 | 8.9 | 8.5 | 8.4 | 8.3 | 7.9 | 7.4 | 7.1 | 6.6 | 6.1 |
| COP | 4.44 | 4.29 | 4.12 | 3.93 | 3.80 | 3.71 | 3.52 | 3.32 | 2.98 | 2.82 | 2.66 | 2.55 | 2.48 | 2.28 | 2.08 | 1.86 | 1.63 | 1.37 |
| EER | 15.2 | 14.6 | 14.1 | 13.4 | 13.0 | 12.7 | 12.0 | 11.4 | 10.2 | 9.6 | 9.1 | 8.7 | 8.5 | 7.8 | 7.1 | 6.4 | 5.6 | 4.7 |
| HI PR | 367 | 352 | 338 | 323 | 316 | 310 | 298 | 286 | 274 | 262 | 251 | 245 | 241 | 232 | 223 | 214 | 206 | 199 |
| LO PR | 135 | 125 | 117 | 108 | 102 | 98 | 90 | 80 | 72 | 65 | 57 | 53 | 51 | 43 | 37 | 31 | 27 | 21 |

Above information is for nominal CFM and 70 degree indoor dry bulb. Instantaneous capacity listed. kW = Total system power

High pressure is measured at the liquid line access fitting. Low pressure is measured at the compressor suction access fitting.

Amps: Unit amps (comp.+ evaporator motor + condenser fan motor)

# EXPANDED HEATING DATA (CONT.)

**GPH1442H41A**

| | Outdoor Ambient Temperature | | | | | | | | | | | | | | | | | |
|---|---|---|---|---|---|---|---|---|---|---|---|---|---|---|---|---|---|---|
| | 65 | 60 | 55 | 50 | 47 | 45 | 40 | 35 | 30 | 25 | 20 | 17 | 15 | 10 | 5 | 0 | -5 | -10 |
| MBh | 47.1 | 44.6 | 42.0 | 39.3 | 37.5 | 36.3 | 33.8 | 31.1 | 26.7 | 24.6 | 22.7 | 21.4 | 20.6 | 18.5 | 16.4 | 14.3 | 12.2 | 10.0 |
| T/R | 33.6 | 31.8 | 29.9 | 28.0 | 26.7 | 25.9 | 24.0 | 22.2 | 19.0 | 17.5 | 16.1 | 15.2 | 14.7 | 13.2 | 11.7 | 10.2 | 8.7 | 7.1 |
| kW | 3.07 | 3.01 | 2.95 | 2.89 | 2.85 | 2.83 | 2.77 | 2.71 | 2.39 | 2.33 | 2.28 | 2.25 | 2.23 | 2.18 | 2.12 | 2.07 | 2.02 | 1.97 |
| Amps | 12.5 | 11.6 | 10.9 | 10.3 | 9.9 | 9.8 | 9.2 | 8.8 | 8.4 | 8.1 | 7.7 | 7.5 | 7.5 | 7.1 | 6.7 | 6.3 | 5.9 | 5.3 |
| COP | 4.50 | 4.34 | 4.17 | 3.98 | 3.85 | 3.76 | 3.57 | 3.36 | 3.27 | 3.09 | 2.91 | 2.78 | 2.71 | 2.49 | 2.26 | 2.02 | 1.77 | 1.49 |
| EER | 15.4 | 14.8 | 14.2 | 13.6 | 13.1 | 12.9 | 12.2 | 11.5 | 11.2 | 10.5 | 9.9 | 9.5 | 9.2 | 8.5 | 7.7 | 6.9 | 6.0 | 5.1 |
| HI PR | 370 | 355 | 341 | 326 | 319 | 313 | 301 | 288 | 276 | 264 | 253 | 247 | 243 | 234 | 225 | 215 | 208 | 200 |
| LO PR | 137 | 127 | 119 | 109 | 103 | 99 | 91 | 81 | 73 | 65 | 58 | 54 | 52 | 44 | 38 | 32 | 28 | 22 |

**GPH1448H41A**

| | Outdoor Ambient Temperature | | | | | | | | | | | | | | | | | |
|---|---|---|---|---|---|---|---|---|---|---|---|---|---|---|---|---|---|---|
| | 65 | 60 | 55 | 50 | 47 | 45 | 40 | 35 | 30 | 25 | 20 | 17 | 15 | 10 | 5 | 0 | -5 | -10 |
| MBh | 56.6 | 53.6 | 50.4 | 47.1 | 45.0 | 43.6 | 40.5 | 37.4 | 32.4 | 29.9 | 27.5 | 26.0 | 25.0 | 22.5 | 19.9 | 17.4 | 14.8 | 12.1 |
| T/R | 32.7 | 31.0 | 29.2 | 27.3 | 26.0 | 25.2 | 23.4 | 21.6 | 18.7 | 17.3 | 15.9 | 15.0 | 14.5 | 13.0 | 11.5 | 10.1 | 8.6 | 7.0 |
| kW | 3.61 | 3.54 | 3.47 | 3.40 | 3.36 | 3.33 | 3.26 | 3.19 | 3.17 | 3.10 | 3.03 | 2.99 | 2.96 | 2.89 | 2.82 | 2.75 | 2.67 | 2.60 |
| Amps | 18.5 | 17.2 | 16.2 | 15.4 | 14.9 | 14.6 | 13.8 | 13.2 | 12.7 | 12.2 | 11.7 | 11.5 | 11.3 | 10.8 | 10.2 | 9.7 | 9.1 | 8.3 |
| COP | 4.59 | 4.43 | 4.25 | 4.06 | 3.92 | 3.84 | 3.64 | 3.43 | 2.99 | 2.82 | 2.66 | 2.55 | 2.48 | 2.28 | 2.07 | 1.85 | 1.62 | 1.37 |
| EER | 15.7 | 15.1 | 14.5 | 13.9 | 13.4 | 13.1 | 12.4 | 11.7 | 10.2 | 9.6 | 9.1 | 8.7 | 8.5 | 7.8 | 7.1 | 6.3 | 5.5 | 4.7 |
| HI PR | 383 | 368 | 353 | 338 | 330 | 324 | 311 | 299 | 286 | 273 | 262 | 256 | 251 | 242 | 233 | 223 | 215 | 208 |
| LO PR | 135 | 126 | 118 | 108 | 102 | 98 | 90 | 80 | 73 | 65 | 57 | 53 | 51 | 43 | 37 | 31 | 27 | 22 |

**GPH1460H41A**

| | Outdoor Ambient Temperature | | | | | | | | | | | | | | | | | |
|---|---|---|---|---|---|---|---|---|---|---|---|---|---|---|---|---|---|---|
| | 65 | 60 | 55 | 50 | 47 | 45 | 40 | 35 | 30 | 25 | 20 | 17 | 15 | 10 | 5 | 0 | -5 | -10 |
| MBh | 68.5 | 64.9 | 61.0 | 57.1 | 54.5 | 52.8 | 49.1 | 45.2 | 42.1 | 38.9 | 35.8 | 33.8 | 32.5 | 29.2 | 25.9 | 22.6 | 19.3 | 15.8 |
| T/R | 39.6 | 37.5 | 35.3 | 33.0 | 31.5 | 30.6 | 28.4 | 26.2 | 24.4 | 22.5 | 20.7 | 19.6 | 18.8 | 16.9 | 15.0 | 13.1 | 11.1 | 9.1 |
| kW | 4.76 | 4.67 | 4.57 | 4.47 | 4.41 | 4.37 | 4.28 | 4.18 | 4.08 | 3.98 | 3.88 | 3.83 | 3.79 | 3.69 | 3.59 | 3.50 | 3.40 | 3.30 |
| Amps | 23.9 | 22.2 | 20.9 | 19.7 | 19.0 | 18.7 | 17.7 | 16.8 | 16.1 | 15.4 | 14.8 | 14.4 | 14.2 | 13.6 | 12.7 | 12.0 | 11.2 | 10.2 |
| COP | 4.21 | 4.07 | 3.91 | 3.74 | 3.61 | 3.54 | 3.36 | 3.17 | 3.02 | 2.86 | 2.70 | 2.58 | 2.51 | 2.32 | 2.11 | 1.89 | 1.66 | 1.40 |
| EER | 14.4 | 13.9 | 13.4 | 12.8 | 12.3 | 12.1 | 11.5 | 10.8 | 10.3 | 9.8 | 9.2 | 8.8 | 8.6 | 7.9 | 7.2 | 6.5 | 5.7 | 4.8 |
| HI PR | 407 | 390 | 375 | 358 | 350 | 343 | 330 | 317 | 303 | 290 | 278 | 272 | 267 | 257 | 247 | 237 | 228 | 220 |
| LO PR | 130 | 121 | 113 | 104 | 98 | 94 | 87 | 77 | 70 | 62 | 55 | 51 | 49 | 41 | 36 | 30 | 26 | 21 |

Above information is for nominal CFM and 70 degree indoor dry bulb. Instantaneous capacity listed. kW = Total system power
High pressure is measured at the liquid line access fitting. Low pressure is measured at the compressor suction access fitting.
Amps: Unit amps (comp.+ evaporator motor + condenser fan motor)

# Heat Kit Electrical Data (Blower Only, Heat Mode)

| Model and Heat Kit Usage | Circuit #1 | | Circuit #2 | | Actual kW / BTU@ 240V |
|---|---|---|---|---|---|
| | MCA[1] | MOD[2] | MCA[1] | MOD[2] | |
| **GPH1424H41A** | 1.5 / 1.5 | -- | -- | -- | -- |
| HKR-05*, HKR-05C* | 24 / 27 | 30 / 30 | -- | -- | 4.75 / 16,200 |
| HKR-08*, HKR-08C* | 33 / 38 | 40 / 40 | -- | -- | 7 / 23,800 |
| HKR-10*, HKR-10C* | 45 / 51 | 60 / 60 | -- | -- | 9.5 / 32,400 |
| **GPH1430H41A** | 2.4 / 2.4 | -- | -- | -- | -- |
| HKR-05*, HKR-05C* | 24 / 27 | 30 / 30 | -- | -- | 4.75 / 16,200 |
| HKR-08*, HKR-08C* | 34 / 39 | 40 / 40 | -- | -- | 7 / 23,800 |
| HKR-10*, HKR-10C* | 45 / 52 | 60 / 60 | -- | -- | 9.5 / 32,400 |
| HKR-15*, HKR-15C* | 45 / 52 | 60 / 60 | 22 / 25 | 30 / 30 | 14.25 / 48,600 |
| **GPH1436H41A** | 2.4 / 2.4 | -- | -- | -- | -- |
| HKR-05*, HKR-05C* | 24 / 27 | 30 / 30 | -- | -- | 4.75 / 16,200 |
| HKR-08*, HKR-08C* | 34 / 39 | 40 / 40 | -- | -- | 7 / 23,800 |
| HKR-10*, HKR-10C* | 45 / 52 | 60 / 60 | -- | -- | 9.5 / 32,400 |
| HKR-15*, HKR-15C* | 45 / 52 | 60 / 60 | 22 / 25 | 30 / 30 | 14.25 / 48,600 |
| **GPH1442H41A** | 3.9 / 3.9 | -- | -- | -- | -- |
| HKR-05*, HKR-05C* | 25 / 27 | 30 / 30 | -- | -- | 4.75 / 16,200 |
| HKR-08*, HKR-08C* | 34 / 39 | 40 / 40 | -- | -- | 7 / 23,800 |
| HKR-10*, HKR-10C* | 46 / 52 | 60 / 60 | -- | -- | 9.5 / 32,400 |
| HKR-15*, HKR-15C* | 46 / 52 | 60 / 60 | 22 / 25 | 30 / 30 | 14.25 / 48,600 |
| HKR-20*,HKR-20C* | 46 / 52 | 60 / 60 | 43 / 49 | 60 / 60 | 19.5 / 66,500 |
| **GPH1348H41A** | 3.9 / 3.9 | -- | -- | -- | -- |
| HKR-05*, HKR-05C* | 25 / 28 | 30 / 30 | -- | -- | 4.75 / 16,200 |
| HKR-08*, HKR-08C* | 34 / 40 | 40 / 40 | -- | -- | 7 / 23,800 |
| HKR-10*, HKR-10C* | 46 / 53 | 60 / 60 | -- | -- | 9.5 / 32,400 |
| HKR-15*, HKR-15C* | 46 / 52 | 60 / 60 | 22 / 25 | 30 / 30 | 14.25 / 48,600 |
| HKR-20*,HKR-20C* | 46 / 52 | 60 / 60 | 43 / 49 | 60 / 60 | 19.5 / 66,500 |
| **GPH1460H41A** | 6.0 / 6.0 | -- | -- | -- | -- |
| HKR-05*, HKR-05C* | 26 / 30 | 30 / 30 | -- | -- | 4.75 / 16,200 |
| HKR-08*, HKR-08C* | 36 / 40 | 40 / 40 | -- | -- | 7 / 23,800 |
| HKR-10*, HKR-10C* | 48 / 54 | 60 / 60 | -- | -- | 9.5 / 32,400 |
| HKR-15*, HKR-15C* | 48 / 54 | 60 / 60 | 22 / 25 | 30 / 30 | 14.25 / 48,600 |
| HKR-20*,HKR-20C* | 48 / 54 | 60 / 60 | 43 / 49 | 60 / 60 | 19.5 / 66,500 |

[1] Minimum Circuit Ampacity @ 208 / 240V
[2] Maximum Overcurrent Protection (amps) @ 208 / 240V
* Indicates revision letter that may or may not be designated

# AIRFLOW DATA

| Model | Speed* | Volts | | E.S.P. (In. of $H_2O$) | | | | | | | |
|---|---|---|---|---|---|---|---|---|---|---|---|
| | | | | 0.10 | 0.20 | 0.30 | 0.40 | 0.50 | 0.60 | 0.70 | 0.80 |
| GPH14 24H41 | T1 | 230 | CFM | 934 | 759 | 755 | 638 | 581 | 489 | - | - |
| | | | Watts | 95 | 77 | 76 | 73 | 83 | 90 | - | - |
| | T2,T3 | 230 | CFM | 990 | 837 | 801 | 744 | 696 | 652 | 601 | - |
| | | | Watts | 107 | 94 | 105 | 110 | 119 | 133 | 142 | - |
| | T4, T5 | 230 | CFM | 1061 | 989 | 947 | 925 | 876 | - | - | - |
| | | | Watts | 126 | 134 | 146 | 158 | 169 | - | - | - |
| GPH14 30H41 | T1 | 230 | CFM | 1022 | 929 | 894 | 829 | 797 | 748 | 695 | 643 |
| | | | Watts | 116 | 114 | 126 | 134 | 144 | 156 | 168 | 173 |
| | T2,T3 | 230 | CFM | 1103 | 1063 | 1012 | 962 | 937 | - | - | - |
| | | | Watts | 142 | 154 | 165 | 173 | 185 | - | - | - |
| | T4, T5 | 230 | CFM | 1285 | 1240 | 1202 | 1163 | 1124 | 1076 | 1046 | 1003 |
| | | | Watts | 205 | 218 | 231 | 244 | 257 | 268 | 280 | 288 |
| GPH14 36H41 | T1 | 230 | CFM | 1234 | 1111 | 1071 | 1024 | 933 | 922 | - | - |
| | | | Watts | 144 | 140 | 152 | 164 | 179 | 183 | - | - |
| | T2,T3 | 230 | CFM | 1287 | 1232 | 1186 | 1133 | 1099 | 1053 | - | - |
| | | | Watts | 162 | 175 | 187 | 201 | 213 | 221 | - | - |
| | T4, T5 | 230 | CFM | 1381 | 1325 | 1277 | 1233 | 1181 | 1144 | - | - |
| | | | Watts | 195 | 203 | 217 | 233 | 247 | 258 | - | - |
| GPH14 42H41 | T1 | 230 | CFM | 1272 | 1197 | 1145 | 1106 | 1055 | 998 | 947 | 906 |
| | | | Watts | 160 | 168 | 183 | 191 | 211 | 220 | 230 | 243 |
| | T2,T3 | 230 | CFM | 1357 | 1297 | 1244 | 1194 | 1147 | 1099 | 1049 | 1008 |
| | | | Watts | 188 | 202 | 213 | 228 | 245 | 255 | 267 | 284 |
| | T4, T5 | 230 | CFM | 1537 | 1478 | 1431 | 1386 | 1336 | 1293 | 1253 | 1208 |
| | | | Watts | 244 | 258 | 274 | 288 | 303 | 317 | 329 | 341 |
| GPH14 48H41 | T1 | 230 | CFM | 1418 | 1383 | 1349 | 1312 | 1275 | 1228 | 1178 | 1141 |
| | | | Watts | 242 | 258 | 273 | 282 | 299 | 308 | 320 | 338 |
| | T2,T3 | 230 | CFM | 1175 | 1635 | 1645 | 1515 | 1510 | 1450 | 1430 | 1400 |
| | | | Watts | 395 | 420 | 435 | 445 | 455 | 465 | 470 | 475 |
| | T4, T5 | 230 | CFM | 1845 | 1790 | 1715 | 1685 | 1590 | 1580 | 1530 | 1500 |
| | | | Watts | 490 | 505 | 520 | 535 | 550 | 560 | 570 | 575 |
| GPH14 60H41 | T1, T2,T3 | 230 | CFM | 1775 | 1635 | 1645 | 1515 | 1510 | 1450 | 1430 | 1400 |
| | | | Watts | 395 | 420 | 435 | 445 | 455 | 465 | 470 | 475 |
| | T4, T5 | 230 | CFM | 2025 | 1900 | 1840 | 1780 | 1725 | 1650 | 1620 | 1580 |
| | | | Watts | 575 | 595 | 620 | 630 | 645 | 655 | 660 | 670 |

* Speed set at T2 at factory.

# DIMENSIONS

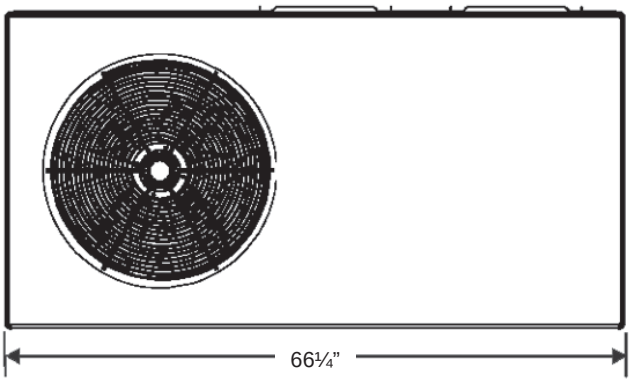


**A Dimensions**

| Model | Chas-sis Size | Height |
|---|---|---|
| GPH1424<br>GPH1430 | Small | 30” |
| GPH1436<br>GPH1442 | Medium | 35” |
| GPH1448<br>GPH1460 | Large | 38¾” |

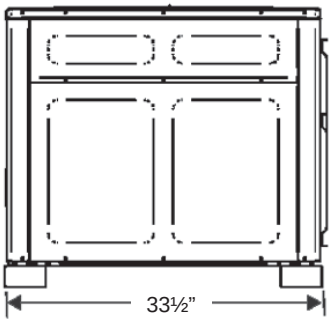


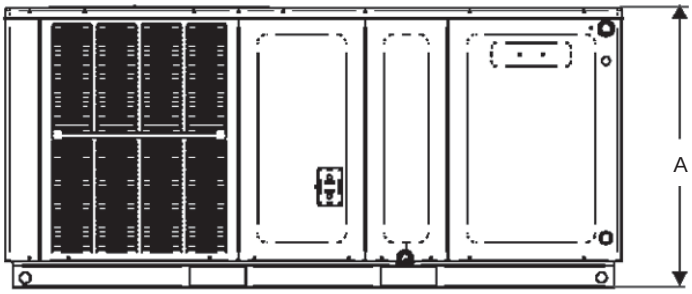


## MINIMAL CLEARANCES

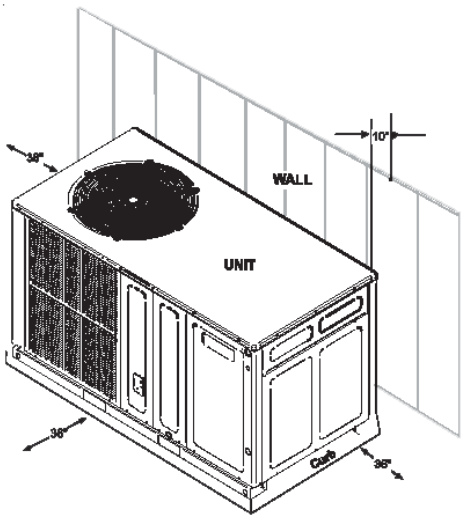


## DUCT OPENINGS

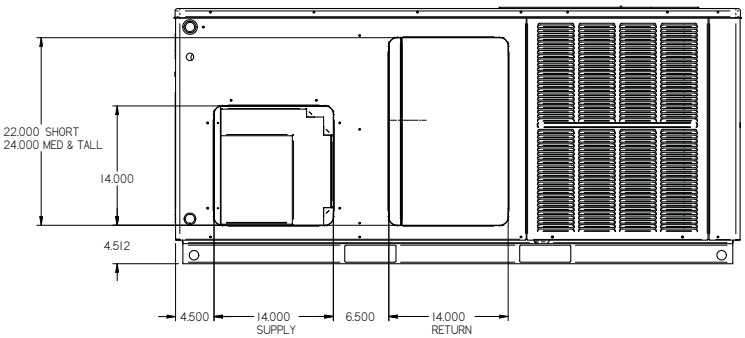


BACK VIEW
(DUCT OPENINGS)

# WIRING DIAGRAM

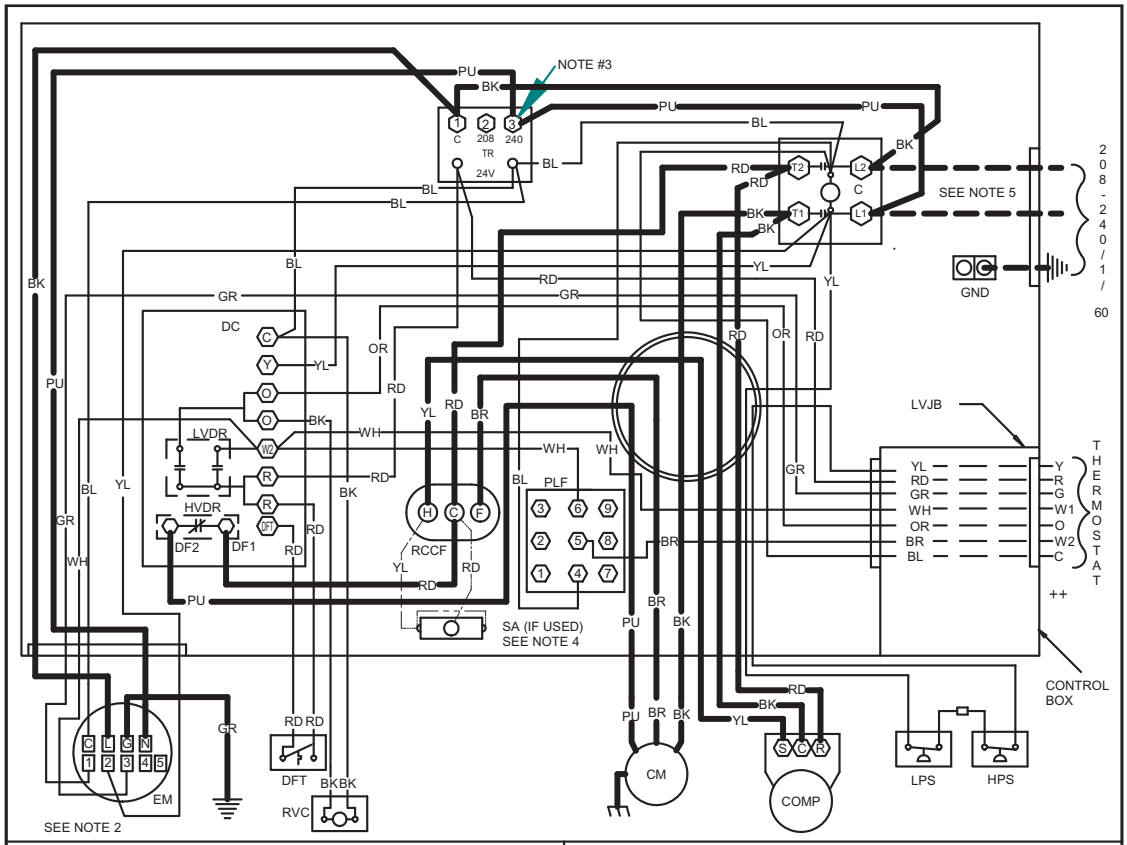


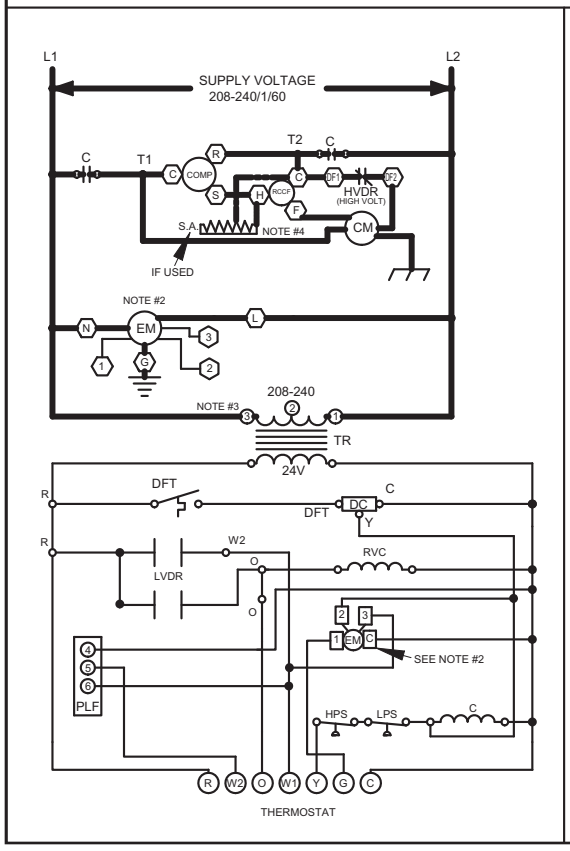


COMPONENT LEGEND

| | |
|---|---|
| C | CONTACTOR |
| CM | CONDENSER MOTOR |
| COMP | COMPRESSOR |
| DC | DEFROST CONTROL |
| DFT | DEFROST THERMOSTAT |
| EM | EVAPORATOR MOTOR |
| GND | EQUIPMENT GROUND |
| HVDR | HIGH VOLTAGE DEFROST RELAY |
| LPS | LOW PRESSURE SWITCH |
| LVDR | LOW VOLTAGE DEFROST RELAY |
| LVJB | LOW VOLTAGE JUNCTION BOX |
| PLF | FEMALE PLUG / CONNECTOR |
| RVC | REVERSING VAVLE COIL |
| RCCF | RUN CAPACITOR FOR COMPRESSOR AND FAN |
| SA | START ASSIST |
| TR | TRANSFORMER |
| HPS | HIGH PRESSURE SWITCH |

FACTORY WIRING
- LINE VOLTAGE
- LOW VOLTAGE
- OPTINAL HIGH VOLTAGE

FIELD WIRING
- HIGH VOLTAGE
- LOW VOLTAGE

WIRE CODE

| | |
|---|---|
| BK | BLACK |
| BL | BLUE |
| BR | BROWN |
| GR | GREEN |
| OR | ORANGE |
| PU | PURPLE |
| RD | RED |
| WH | WHITE |
| YL | YELLOW |

NOTES:

1. REPLACEMENT WIRE MUST BE SAME SIZE AND TYPE INSULATION AS ORIGINAL (AT LEAST 105°C) USE COPPER CONDUCTOR ONLY.
2. TO CHANGE EVAPORATOR MOTOR SPEED MOVE WHITE AND YELLOW LEADS FROM EM"2" AND "3" TO "4" AND "5". IF BOTH LEADS ARE ENERGIZED, THE HIGHER SPEED SETTING IS USED.
3. FOR 208 VOLT TRANSFORMER OPERATION MOVE PURPLE WIRES FROM TERMINAL 3 TO TERMINAL 2 ON TRANSFORMER.
4. START ASSIST FACTORY EQUIPED WHEN REQUIRED
5. USE COPPER CONDUCTORS ONLY

++ USE N.E.C. CLASS 2 WIRE

SEE UNIT RATING PLATE FOR TYPE AND SIZE OF OVER CURRENT PROTECTION

208-240/1/60 0140G00872 REV. A

**WARNING**

**High Voltage:** Disconnect all power before servicing or installing this unit. Multiple power sources may be present. Failure to do so may cause property damage, personal injury, or death.

Wiring is subject to change. Always refer to the wiring diagram on the unit for the most up-to-date wiring

# Accessories

| Item | Description |
|---|---|
| OT/EHR18-60 | Emergency Heat Relay kit |
| OT18-60A | Outdoor Thermostat Kit with Lockout Stat |
| PCCP102/103 | Roof Curb for for Medium/Large Chassis |
| PCE102/103 | Downflow Economizer for for Medium/Large Chassis |
| PCEF102/103 | Elbow & Flashing w/ R-8 Liner for Medium/Large Chassis |
| PCFR102/103 | External Horizontal Filter Rack for Medium/Large Chassis |
| PCMD102/103 | Manual Damper for Medium/Large Chassis |
| PCMDH102/103 | Manual Damper for Medium/Large Chassis — Horizontal Applications |
| PCMDM102/103 | Motorized Damper for Medium/Large Chassis |
| PCP102/103 | Downflow Plenum Kit for Medium/Large Chassis |
| PCP102/103R8 | Downflow Plenum Kit for Medium/Large Chassis |
| SQRPC101 | Square-to-Round Adapter for Small Chassis — 16” Rounds |
| SQRPC102-103 | Square-to-Round Adapter for Medium/Large Chassis — 18” Rounds |
| SQRPCH101 | Square-to-Round Adapters Small Chassis for Small Chassis — 16” x 14” |
| SQRPCH102-103 | Square-to-Round Adapters for Medium/Large Chassis — 18” x 14” |

# Notes

# Notes

*Goodman Manufacturing Company, L.P., reserves the right to discontinue, or change at any time, specifications or designs without notice or without incurring obligations. © 2009 • Goodman Manufacturing Company, L.P. • Houston, Texas • Printed in the USA.*