Goodman®

Air Conditioning & Heating

Product Specifications

80% AFUE

Heating Input:
45,000–140,000 BTU/h

GMS8/GDS8/GHS8

Multi-Position, Single-Stage/ Multi-Speed Gas Furnaces

The Goodman® brand GMS8/ GHS8/ GDS8 Single-Stage, Multi-Speed Gas Furnaces feature a patented aluminized-steel tubular heat exchanger and energy-efficient Hot Surface Ignition system. This furnace is run-tested for heating or combination heating/cooling applications. With a heavy-gauge, reinforced steel cabinet and durable baked enamel finish, this unit can be installed in a variety of locations.

Standard Features

- Patented TuffTube™ dual-diameter tubular heat exchanger
- Single-stage combination redundant gas valve
- Norton hot surface mini-igniter
- Quiet four-speed direct-drive circulator blower motor
- Furnace control board with self-diagnostics and low-voltage terminal block
- Quiet single-speed, induced-draft blower

Cabinet Features

- Foil-faced insulation lines the heat exchanger compartment
- Designed for multi-position installation:
  GMS8 and GHS8: upflow, horizontal left or right
  GDS8: dedicated downflow
- Coil and furnace fit flush for most installations

Contents

Nomenclature....2
Product Specifications....3
Dimensions....5
Blower Performance Specifications....7
Wiring Diagrams....10
Schematics....11
Accessories....12

LIFETIME HEAT EXCHANGER LIMITED WARRANTY* | 10 YEAR PARTS LIMITED WARRANTY* | GoodCare EXTENDED SERVICE PLAN

*To receive the Lifetime Heat Exchanger Limited Warranty and 10-Year Parts Limited Warranty, online registration must be completed within 60 days of installation. Online registration is not required in California or Québec. Full warranty details available at www.goodmanmfg.com.

NOMENCLATURE

G	M	S	8	045	4	B	X	A
1	2	3	4,5	6,7,8	9	10	11	12

Brand
- G Goodman® Brand or Distinctions™

Airflow Direction
- C Downflow/Horizontal
- D Dedicated Downflow
- H High Airflow
- K Dedicated Upflow
- M Upflow/Horizontal

Description
- V Two-Stage/Variable-speed
- H Two-Stage/Multi-speed
- S Single-Stage/Multi-speed
- E Two-Stage/X-13 Motor

AFUE
- 95 95%
- 9 90%+
- 8 80%

MBTU/h
- 045: 45,000
- 070: 70,000
- 090: 90,000
- 115: 115,000
- 140: 140,000

Maximum CFM @ 0.5" ESP
- 3 1200
- 4 1600
- 5 2000

Cabinet Width
- A 14"
- B 17½"
- C 21"
- D 24½"

NOx
- N Natural Gas
- X Low NOx

Revisions
- A Initial Release
- B 1st Revision
- C 2nd Revision

GMS8 SPECIFICATIONS

	GMS8 0453ANB*	GMS8 0703ANB*	GMS8 0704BNB*	GMS8 0904BNB*	GMS8 0905CNB*	GMS8 1155CNB*	GMS8 1405DNB
Heating Capacity							
Input[1]	45,000	70,000	70,000	90,000	90,000	115,000	140,000
Natural Gas Output[1]	36,000	56,000	56,000	72,000	72,000	92,000	112,000
LP Gas Output[1]	32,000	48,000	48,000	64,000	64,000	80,000	96,000
AFUE[2]	80	80	80	80	80	80	80
Temperature Rise Range (°F)	25 - 55	25 - 55	20 - 50	35 - 65	35 - 65	35 - 65	40 - 70
Available AC @ 0.5” ESP	3	3	4	4	5	5	5
Circulator Blower							
Size (D x W)	10” x 6”	10” x 6”	10” x 8”	10” x 8”	10” x 10”	10” x 10”	10” x 10”
Horsepower @ 1750 RPM	⅓	⅓	½	½	½	½	¾
Speed	4	4	4	4	4	4	4
Vent Diameter[3]	4”	4”	4”	4”	4”	4”	4”
No. of Burners	2	3	3	4	4	5	6
Filter Size (in²)							
Permanent	290	290	385	385	480	480	480
Disposable	580	580	770	770	960	960	960
Electrical Data							
Min. Circuit Ampacity[4]	8.5	8.5	12.9	12.9	12.9	12.9	15.2
Max. Overcurrent Device (amps)[5]	15	15	15	15	15	15	15
Ship Weight (lbs)	120	130	143	153	163	163	183

* Low NOx model available.

	GMS8 0453ANC	GMS8 0703ANC	GMS8 0704BNC	GMS8 0903BNC	GMS8 0904BNC	GMS8 0905CNC	GMS8 1155CNC	GMS8 1405DNC
Heating Capacity								
Input[1]	45,000	70,000	70,000	90,000	90,000	90,000	115,000	140,000
Natural Gas Output[1]	36,000	56,000	56,000	72,000	72,000	72,000	92,000	112,000
LP Gas Output[1]	32,000	48,000	48,000	64,000	64,000	64,000	80,000	96,000
AFUE[2]	80	80	80	80	80	80	80	80
Available AC @ 0.5” ESP	3	3	4	3	4	5	5	5
Circulator Blower								
Size (D x W)	10” x 6”	10” x 6”	10” x 8”	10” x 8”	10” x 8”	10” x 10”	10” x 10”	11” x 10”
Horsepower @1075 RPM	⅓	⅓	½	½	½	½	½	¾
Speed	4	4	4	4	4	4	4	4
Vent Diameter[3]	4"	4"	4"	4"	4"	4"	4"	4"
No. of Burners	2	3	3	4	4	4	5	6
Disposable Filter Size (in²)	580	580	770	580	770	960	960	960
Electrical Data								
Min. Circuit Ampacity[4]	8.1	8.1	12.5	8.1	12.5	12.5	12.5	14.7
Max. Overcurrent Device (amps)[5]	15	15	15	15	15	15	15	15
Ship Weight (lbs)	120	130	143	153	153	163	163	163

1 Natural Gas BTU/h. For altitudes above 2,000’, reduce input rating 4% for each 1,000’ above sea level.
2 DOE AFUE based upon Isolated Combustion System (ICS)
3 Vent diameters may vary depending upon vent length. Refer to the latest editions of the National Fuel Gas Code NFPA 54/ANSI Z223.1 (in the USA) and the Canada National Standard of Canada, CAN/CSA B149.1 and CAN/CSA B142.2 (in Canada).
4 Minimum Circuit Ampacity = (1.25 x Circulator Blower Amps) + ID Blower amps. Wire size should be determined in accordance with National Electrical Codes. Extensive wire runs will require larger wire sizes.
5 Maximum Overcurrent Protection Device refers to maximum recommended fuse or circuit breaker size. May use fuses or HACR-type circuit breakers of the same size as noted.

Notes:
- All furnaces are manufactured for use on 115 VAC, 60 Hz, single-phase electrical supply.
- Gas Service Connection ½” FPT
- Important: Size fuses and wires properly; make electrical connections in accordance with National Electrical Code and/or all existing local codes.

GDS8/GHS8 Specifications

	GDS8 0453AXB	GDS8 0703AXB	GDS8 0904BXB	GDS8 1155CXB	GHS8 0453AXB	GHS8 0704BXB	GHS8 0905CXB
Heating Capacity							
Input[1]	45,000	70,000	90,000	115,000	45,000	70,000	90,000
Natural Gas Output[1]	36,000	56,000	72,000	92,000	36,000	56,000	72,000
LP Gas Output[1]	32,000	48,000	64,000	80,000	32,000	48,000	64,000
AFUE[2]	80	80	80	80	80	80	80
Temperature Rise Range (°F)	20 - 50	30 - 60	35 - 65	40 - 70	15 - 45	20 - 50	35 - 65
Available AC @ 0.5” ESP	3	3	4	5	3	4	5
Circulator Blower							
Size (D x W)	10” x 6”	10” x 6”	10” x 8”	10” x 10”	10” x 6”	10” x 8”	11” x 10”
Horsepower @ 1750 RPM	⅓	⅓	½	½	½	¾	¾
Speed	4	4	4	4	4	3	3
Vent Diameter[3]	4”	4”	4”	4”	4”	4”	4”
No. of Burners	2	3	4	5	2	3	4
Disposable Filter Size (in²)	580	580	770	960	580	770	960
Electrical Data							
Min. Circuit Ampacity[4]	8.5	8.5	12.9	12.9	12.9	12.2	12.2
Max. Overcurrent Device (amps)[5]	15	15	15	15	15	15	15
Ship Weight (lbs)	120	130	153	175	120	130	153

[1] Natural Gas BTU/h. For altitudes above 2,000’, reduce input rating 4% for each 1,000’ above sea level.

[2] DOE AFUE based upon Isolated Combustion System (ICS)

[3] Vent diameters may vary depending upon vent length. Refer to the latest editions of the National Fuel Gas Code NFPA 54/ANSI Z223.1 (in the USA) and the Canada National Standard of Canada, CAN/CSA B149.1 and CAN/CSA B142.2 (in Canada).

[4] Minimum Circuit Ampacity = (1.25 x Circulator Blower Amps) + ID Blower amps. Wire size should be determined in accordance with National Electrical Codes. Extensive wire runs will require larger wire sizes.

[5] Maximum Overcurrent Protection Device refers to maximum recommended fuse or circuit breaker size. May use fuses or HACR-type circuit breakers of the same size as noted.

Notes:

- All furnaces are manufactured for use on 115 VAC, 60 Hz, single-phase electrical supply.
- Gas Service Connection ½” FPT
- Important: Size fuses and wires properly and make electrical connections in accordance with the National Electrical Code and/or all existing local codes.

GMS8 DIMENSIONS

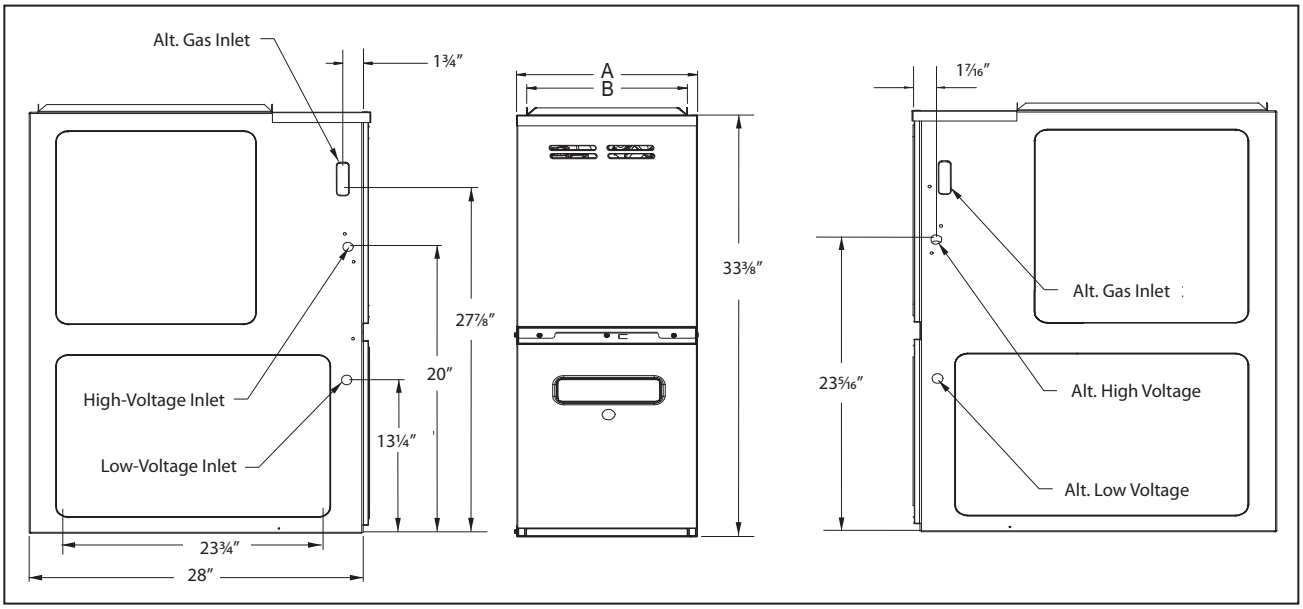

Model	A	B
GMS80453ANB*	14”	12½”
GMS80703ANB*	14”	12½”
GMS80704BNB*	17½”	16”
GMS80904BNB*	17½”	16”
GMS80905CNB*	21”	19½”
GMS81155CNB*	21”	19½”
GMS81405DNB	24½”	23”

* Low NOx model available.

Model	A	B
GMS80453AXC	14”	12½”
GMS80703AXC	14”	12½”
GMS80704BXC	17½”	16”
GMS80903BNC	17½”	16”
GMS80904BXC	17½”	16”
GMS80905CXC	21”	19½”
GMS81155CXC	21”	19½”
GMS81405DXC	24½”	23”

Notes:

- Line voltage wiring can enter through the right or left side of furnace.
  Low-voltage wiring can enter through the right or left side of furnace.
- Conversion kits for high-altitude (7,000+ ft) natural gas operation are available.
  Contact your Goodman distributor or dealer for details.

MINIMUM CLEARANCES TO COMBUSTIBLE MATERIALS

Sides	Rear	Front[1]	Vent[2]		Top
			SW	B	
1”	0”	3”	6”	1”	1”

[1] 24” clearance for serviceability recommended.

[2] Single Wall Vent (SW) to be used only as a connector. Refer to the latest editions of the National Fuel Gas Code NFPA 54/ ANSI Z223.1 (in the USA) and the Canada National Standard of Canada, CAN/CSA B149.1 and CAN/CSA B142.2 (in Canada).

Note: GMH8 approved for line contact in the horizontal position.

GHS8 Dimensions

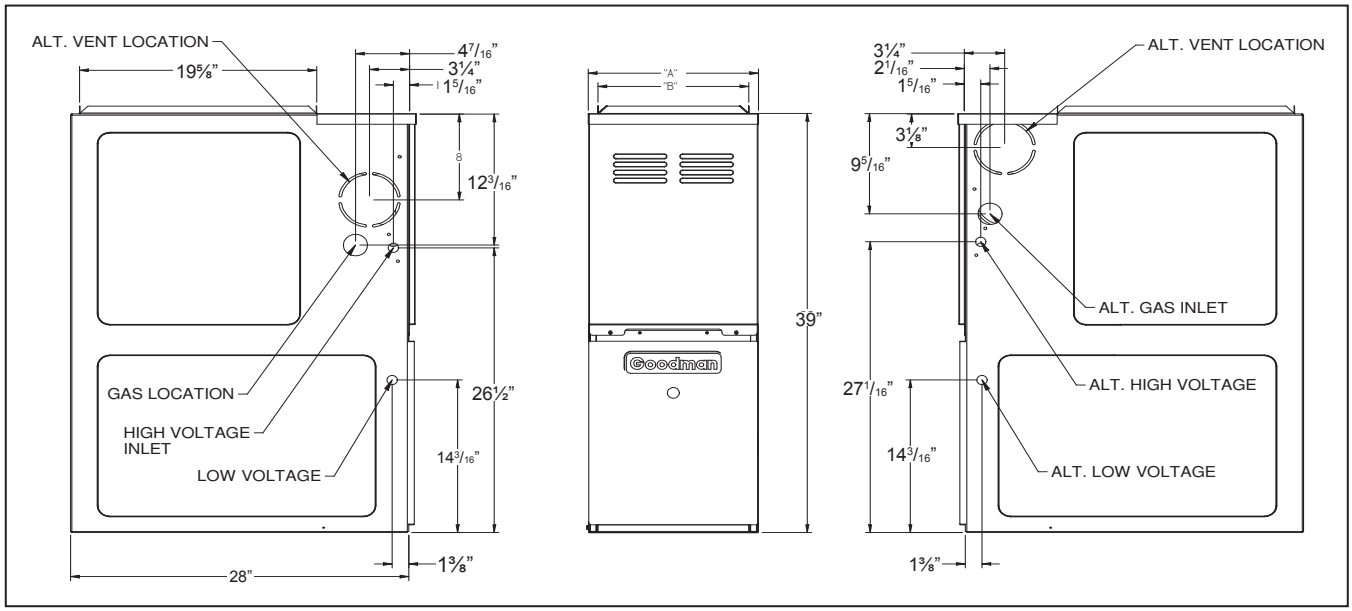

Model	A	B
GHS80453AXB	14”	12½”
GHS80704BXB	17½”	16”
GHS80905CXB	21”	19½”

Minimum Clearances to Combustible Materials

Sides	Rear	Front[1]	Vent[2]		Top
			SW	B	
1”	0”	3”	6”	1”	1”

[1] 24” clearance for serviceability recommended.

[2] Single Wall Vent (SW) to be used only as a connector. Refer to the latest editions of the National Fuel Gas Code NFPA 54/ ANSI Z223.1 (in the USA) and the Canada National Standard of Canada, CAN/CSA B149.1 and CAN/CSA B142.2 (in Canada).

Note: GMS8 and GHS8 models approved for line contact in the horizontal position.

GDS8 DIMENSIONS

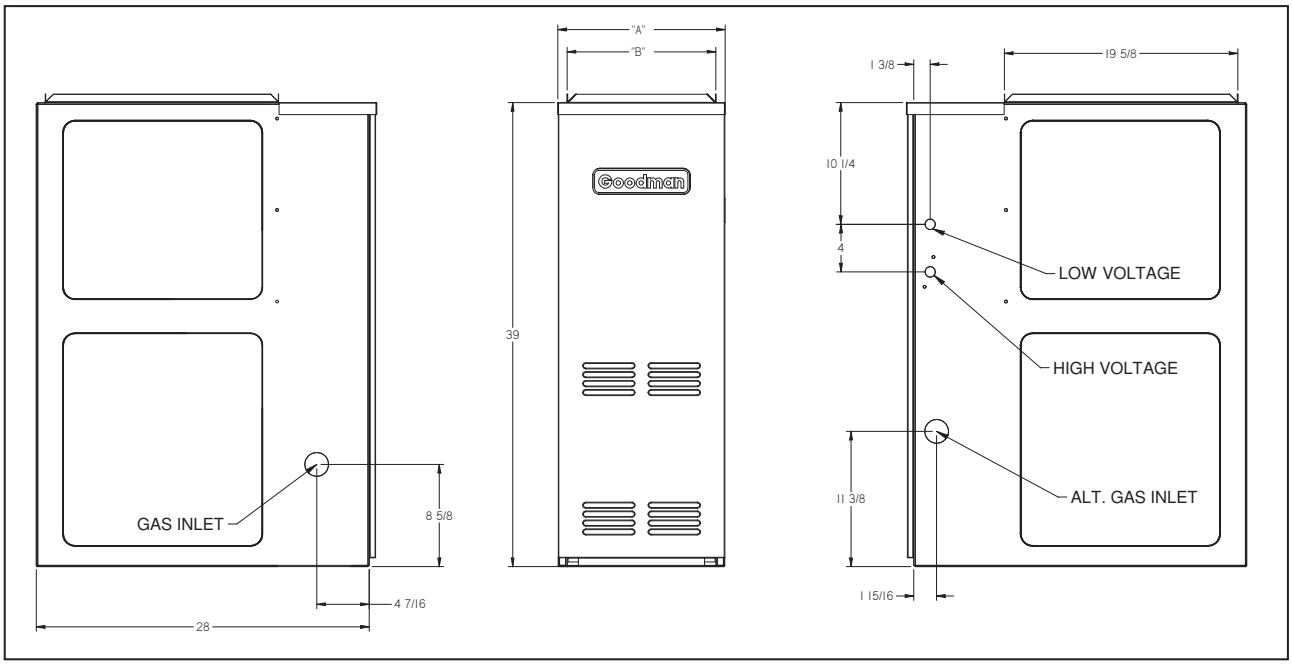

Model	A	B	Non-Combustible Floor Base
GDS80453AXB	14”	12½”	SBT14
GDS80703AXB	14”	12½”	SBT14
GDS80904BXB	17½”	16”	SBT17
GDS81155CXB	21”	19½”	SBT21

MINIMUM CLEARANCES TO COMBUSTIBLE MATERIALS

Sides	Rear	Front[1]	Vent[2]		Top
			SW	B	
1”	0”	3”	6”	1”	1”

[1] 24” clearance for serviceability recommended.
[2] Single Wall Vent (SW) to be used only as a connector. Refer to the latest editions of the National Fuel Gas Code NFPA 54/ ANSI Z223.1 (in the USA) and the Canada National Standard of Canada, CAN/CSA B149.1 and CAN/CSA B142.2 (in Canada).

AIRFLOW DATA — GMS8 B Models

(CFM & Temperature Rise vs. External Static Pressure)															
Model	Motor Speed	Tons AC[1]	External Static Pressure, (Inches Water Column)												
			0.1		0.2		0.3		0.4		0.5		0.6	0.7	0.8
			CFM	Rise	CFM	Rise	CFM	Rise	CFM	Rise	CFM	Rise	CFM	CFM	CFM
GMS8 0453ANB* (Med)[2]	High	3.0	1,555	---	1,511	---	1,459	---	1,392	---	1,344	25	1,279	1,201	1,120
	Med	2.5	1,165	28	1,123	30	1,100	30	1,090	30	1,048	32	1,017	970	903
	Med-Lo	2.0	927	36	907	37	889	37	863	38	853	39	822	800	746
	Low	1.5	699	47	694	48	668	50	645	51	636	52	592	566	524
GMS8 0703ANB* (Med)[2]	High	3.0	1,437	36	1,310	39	1,295	40	1,310	39	1,273	41	1,202	1,129	1,039
	Med	2.5	1,127	46	1,100	47	1,095	47	1,075	48	1,050	49	1,018	967	904
	Med-Lo	2.0	895	---	917	---	878	---	867	---	853	---	830	786	743
	Low	1.5	694	---	681	---	663	---	640	---	625	---	591	562	522
GMS8 0704BNB* (Med)[2]	High	4.0	2,234	23	2,151	24	2,076	25	1,990	26	1,897	27	1,803	1,710	1,569
	Med	3.5	1,676	31	1,653	31	1,648	31	1,581	33	1,555	33	1,492	1,414	1,352
	Med-Lo	3.0	1,342	38	1,335	39	1,321	39	1,313	39	1,291	40	1,261	1,215	1,149
	Low	2.5	1,089	47	1,085	48	1,078	48	1,071	48	1,057	49	1,040	986	932
GMS8 0904BNB* (Med)[2]	High	4.0	2,182	---	2,127	31	2,056	32	1,974	33	1,895	35	1,809	1,715	1,588
	Med	3.5	1,645	40	1,628	40	1,615	40	1,597	41	1,541	43	1,491	1,440	1,350
	Med-Lo	3.0	1,320	49	1,305	49	1,310	49	1,310	50	1,295	51	1,267	1,217	1,139
	Low	2.5	1,063	60	1,061	60	1,057	61	1,056	61	1,039	61	1,025	1,005	948
GMS8 0905CNB* (Med)[2]	High	5.0	2,334	---	2,334	---	2,284	---	2,135	---	2,051	35	1,910	1,748	1,605
	Med	4.0	1,754	39	1,735	39	1,728	40	1,685	40	1,628	42	1,551	1,469	1,346
	Med-Lo	3.5	1,367	47	1,380	47	1,371	47	1,374	48	1,335	50	1,293	1,246	1,165
	Low	3.0	1,098	58	1,109	59	1,109	59	1,088	60	1,066	62	1,050	998	916
GMS8 1155CNB* (Med)[2]	High	5.0	2,481	---	2,395	35	2,288	37	2,217	38	2,076	41	1,999	1,858	1,732
	Med	4.0	1,738	49	1,732	49	1,709	50	1,686	50	1,639	52	1,585	1,492	1,385
	Med-Lo	3.5	1,364	62	1,378	62	1,372	62	1,372	62	1,350	63	1,313	1,261	1,125
	Low	3.0	1,137	---	1,142	---	1,140	---	1,114	---	1,090	---	1,056	954	860
GMS8 1405DNB (Med)[2]	High	5.0	2,554	41	2,435	43	2,375	44	2,240	47	2,152	49	2,002	1,883	1,744
	Med	4.0	1,846	57	1,773	59	1,762	60	1,712	61	1,672	63	1,583	1,526	1,442
	Med-Lo	3.5	1,520	69	1,500	70	1,483	---	1,470	---	1,435	---	1,373	1,308	1,245
	Low	3.0	1,301	---	1,274	---	1,260	---	1,231	---	1,207	---	1,177	1,093	931

* Low NOx model available.

[1] at 0.5” ESP

[2] Heating speed as shipped

Notes:

- CFM in chart is without filter(s). Filters do not ship with this furnace, but must be provided by the installer. If the furnace requires two return filters, this chart assumes both filters are installed.
- All furnaces ship as high-speed cooling and medium-speed heating. Installer must adjust blower cooling and heating speed as needed.
- For most jobs, about 400 CFM per ton when cooling is desirable.
- INSTALLATION IS TO BE ADJUSTED TO OBTAIN TEMPERATURE RISE WITHIN THE RANGE SPECIFIED ON THE RATING PLATE.
- This chart is for information only. For satisfactory operation, external static pressure should not exceed value shown on the rating plate. The shaded area indicates ranges in excess of recommended maximum heating static pressure.
- The dashed (----) areas indicate a temperature rise not recommended for this model.
- The above chart is for U.S. furnaces installed at 0-2000 feet. At higher altitudes, a properly derated unit will have approximately the same temperature rise at a particular CFM, while ESP at the CFM will be lower.

AIRFLOW DATA — GMS8 C Models

(CFM & Temperature Rise vs. External Static Pressure)															
Model	Motor Speed	Tons AC[1]	External Static Pressure, (Inches Water Column)												
			0.1		0.2		0.3		0.4		0.5		0.6	0.7	0.8
			CFM	Rise	CFM	Rise	CFM	Rise	CFM	Rise	CFM	Rise	CFM	CFM	CFM
GMS8 0453A*C* (Medium)	High	3	1,521	22	1,466	23	1,414	24	1,373	24	1,298	26	1,243	1,164	1,075
	Med	2.5	1,160	29	1,160	29	1,132	29	1,121	30	1,082	31	1,042	997	925
	Med-Lo	2	961	35	955	35	948	35	932	36	913	37	882	821	803
	Low	1.5	781	43	785	42	781	43	773	43	761	44	745	716	668
GMS8 0703A*C* (Medium)	High	3	1,422	36	1,352	38	1,307	40	1,197	43	1,157	45	1,092	1,075	983
	Med	2.5	1,098	47	1,081	48	1,051	49	1,039	50	1,021	51	983	924	868
	Med-Lo	2	919	56	913	57	892	58	847	----	829	----	818	792	728
	Low	1.5	758	----	741	----	741	----	733	----	699	----	677	649	626
GMS8 0704B*C* (Medium)	High	4	2,134	----	2,100	25	2,042	25	1,975	26	1,883	28	1,786	1,700	1,601
	Med	3.5	1,668	31	1,663	31	1,656	31	1,645	32	1,616	32	1,549	1,492	1,391
	Med-Lo	3	1,419	37	1,426	36	1,426	36	1,432	36	1,419	37	1,378	1,328	1,261
	Low	2.5	1,134	46	1,145	45	1,166	44	1,171	44	1,160	45	1,144	1111	1071
GMS8 0903B*C* (Medium)	High	3	1,607	41	1,572	42	1,547	43	1,498	45	1,448	46	1,390	1,302	1,222
	Med	2.5	1,159	58	1,156	58	1,145	58	1,127	59	1,108	60	1,075	1,033	957
	Med-Lo	2	938	----	916	----	916	----	900	----	889	----	865	829	785
	Low	1.5	785	----	766	----	743	----	730	----	709	----	683	666	604
GMS8 0904B*C* (Medium)	High	4	2,051	----	1,983	----	1,895	35	1,812	37	1,725	39	1,627	1,530	1,439
	Med	3.5	1,736	38	1,708	39	1,652	40	1,611	41	1,540	43	1,475	1,394	1,307
	Med-Lo	3	1,493	45	1,668	40	1,459	46	1,429	47	1,389	48	1,339	1,274	1,204
	Low	2.5	1,200	56	1,185	56	1,180	56	1,173	57	1,158	58	1,125	1,125	1080
GMS8 0905C*C* (Medium)	High	5	2,290	----	2,229	----	2,155	----	2,047	----	1,960	----	1,837	1,712	1,584
	Med	4	1,852	36	1,820	37	1,777	38	1,719	39	1,641	41	1,567	1,469	1,382
	Med-Lo	3.5	1,615	41	1,592	42	1,556	43	1,516	44	1,470	45	1,405	1,346	1,235
	Low	3	1,290	52	1,285	52	1,265	53	1,235	54	1,214	55	1,174	1044	904
GMS8 1155C*C* (Medium)	High	5	2,323	37	2,225	38	2,120	40	2,040	42	1,974	43	1,801	1,688	1,577
	Med	4	1,858	46	1,847	46	1,799	47	1,744	49	1,674	51	1,577	1,493	1,399
	Med-Lo	3.5	1,596	53	1,587	54	1,571	54	1,552	55	1,493	57	1,397	1,326	1,217
	Low	3	1,291	----	1,272	----	1,261	----	1,257	----	1,205	----	1,168	1118	1060
GMS8 1405D*C* (Medium)	High	5	2,469	42	2,389	43	2,300	45	2,223	47	2,131	49	2,027	1,902	1,786
	Med	4	1,575	66	1,558	67	1,545	67	1,513	69	1,500	69	1,419	1,354	1,271
	Med-Lo	3.5	1,402	----	1,380	----	1,343	----	1,319	----	1,296	----	1,245	1,183	1,106
	Low	3	1,200	----	1,186	----	1,161	----	1,127	----	1,082	----	1,042	995	926

Notes:

- CFM in chart is without filter(s). Filters do not ship with this furnace, but must be provided by the installer. If the furnace requires two return filters, this chart assumes both filters are installed.
- All furnaces ship as high-speed cooling and medium-speed heating. Installer must adjust blower cooling and heating speed as needed.
- For most jobs, about 400 CFM per ton when cooling is desirable.
- INSTALLATION IS TO BE ADJUSTED TO OBTAIN TEMPERATURE RISE WITHIN THE RANGE SPECIFIED ON THE RATING PLATE.
- This chart is for information only. For satisfactory operation, external static pressure **should** not exceed value shown on the rating plate.
- The dashed (----) areas indicate a temperature rise not recommended for this model.
- The above chart is for U.S. furnaces installed at 0-2000 feet. At higher altitudes, a properly derated unit will have approximately the same temperature rise at a particular CFM, while ESP at the CFM will be lower.

AIRFLOW DATA — GDS8 / GHS8

(CFM & Temperature Rise vs. External Static Pressure)															
Model	Motor Speed	Tons AC[1]	External Static Pressure, (Inches Water Column)												
			0.1		0.2		0.3		0.4		0.5		0.6	0.7	0.8
			CFM	Rise	CFM	Rise	CFM	Rise	CFM	Rise	CFM	Rise	CFM	CFM	CFM
GDS8 0453AXB (Med)[2]	High	3.0	1,435	---	1,421	---	1,380	---	1,322	25	1,262	26	1,200	1,144	1,064
	Med	2.5	1,140	29	1,114	30	1,084	31	1,063	31	1,039	32	1,002	943	897
	Med-Lo	2.0	899	37	889	37	875	38	871	38	857	39	821	780	745
	Low	1.5	691	48	674	49	665	50	651	51	637	52	618	562	525
GDS8 0703AXB (Med)[2]	High	3.0	1,406	37	1,393	37	1,379	37	1,307	39	1,262	41	1,208	1,145	1,070
	Med	2.5	1,153	45	1,101	47	1,077	48	1,039	50	1,028	50	987	947	885
	Med-Lo	2.0	890	58	896	58	873	59	862	60	834	---	798	771	727
	Low	1.5	690	---	682	---	664	---	631	---	616	---	583	549	509
GDS8 0904BXB (Med)[2]	High	4.0	2,007	---	1,993	---	1,975	---	1,940	---	1,844	36	1,770	1,668	1,559
	Med	3.5	1,612	41	1,606	41	1,570	42	1,533	43	1,501	44	1,448	1,373	1,301
	Med-Lo	3.0	1,325	50	1,299	51	1,280	52	1,244	53	1,222	54	1,186	1,140	1,079
	Low	2.5	1,043	64	1,040	64	1,032	64	1,002	---	981	---	955	915	869
GDS8 1155CXB (Med)[2]	High	5.0	2,381	---	2,312	---	2,312	---	2,219	---	2,134	40	2,024	1,930	1,839
	Med	4.0	1,801	47	1,667	51	1,667	51	1,638	52	1,613	53	1,513	1,441	1,369
	Med-Lo	3.5	969	---	1,062	---	1,140	---	1,223	69	1,269	67	1,292	1,322	1,358
	Low	3.0	1,100	---	1,094	---	1,060	---	1,031	---	1,001	---	953	937	874

(CFM & Temperature Rise vs. External Static Pressure)																		
Model	Motor Speed	Tons AC[1]	External Static Pressure, (Inches Water Column)															
			0.1		0.2		0.3		0.4		0.5		0.6		0.7		0.8	
			CFM	Rise	CFM	Rise	CFM	Rise	CFM	Rise	CFM	Rise	CFM	Rise	CFM	Rise	CFM	Rise
GHS8 0453AXB (Med)[2]	High	3.0	1,654	---	1,647	---	1,605	---	1,537	---	1,499	---	1,493	---	1,406	---	1,307	25
	Med	2.5	1,489	---	1,463	---	1,456	---	1,416	---	1,403	---	1,346	25	1,271	26	1,185	28
	Med-Lo	2.0	1,349	25	1,282	26	1,246	27	1,235	27	1,218	27	1,187	28	1,128	29	1,051	32
	Low	1.5	1,088	30	1,086	31	1,082	31	1,069	31	1,045	32	1,013	33	968	34	908	37
GHS8 0704BXB (Med)[2]	High	4.0	2,040	25	1,991	26	1,942	27	1,912	27	1,891	27	1,850	28	1,828	28	1,785	29
	Med	3.5	1,563	33	1,527	34	1,490	35	1,461	35	1,444	36	1,423	36	1,401	37	1370	38
	Low	3.0	1165	44	1149	45	1133	46	1122	46	1,111	46	1,089	47	1,048	49	994	52
GHS8 0905CXB (Med)[2]	High	5.0	2,402	---	2,321	---	2,265	---	2,193	---	2,134	---	2,057	---	1,962	---	1,895	35
	Med	4.0	1,754	38	1,718	39	1,661	40	1,622	41	1,581	42	1,519	44	1,433	46	1,387	48
	Low	3.5	1,266	52	1,234	54	1,177	56	1,143	58	1,071	62	1,024	65	964	---	878	---

[1] at 0.5" ESP
[2] Heating speed as shipped
• See **Notes** on previous page.

WIRING DIAGRAM

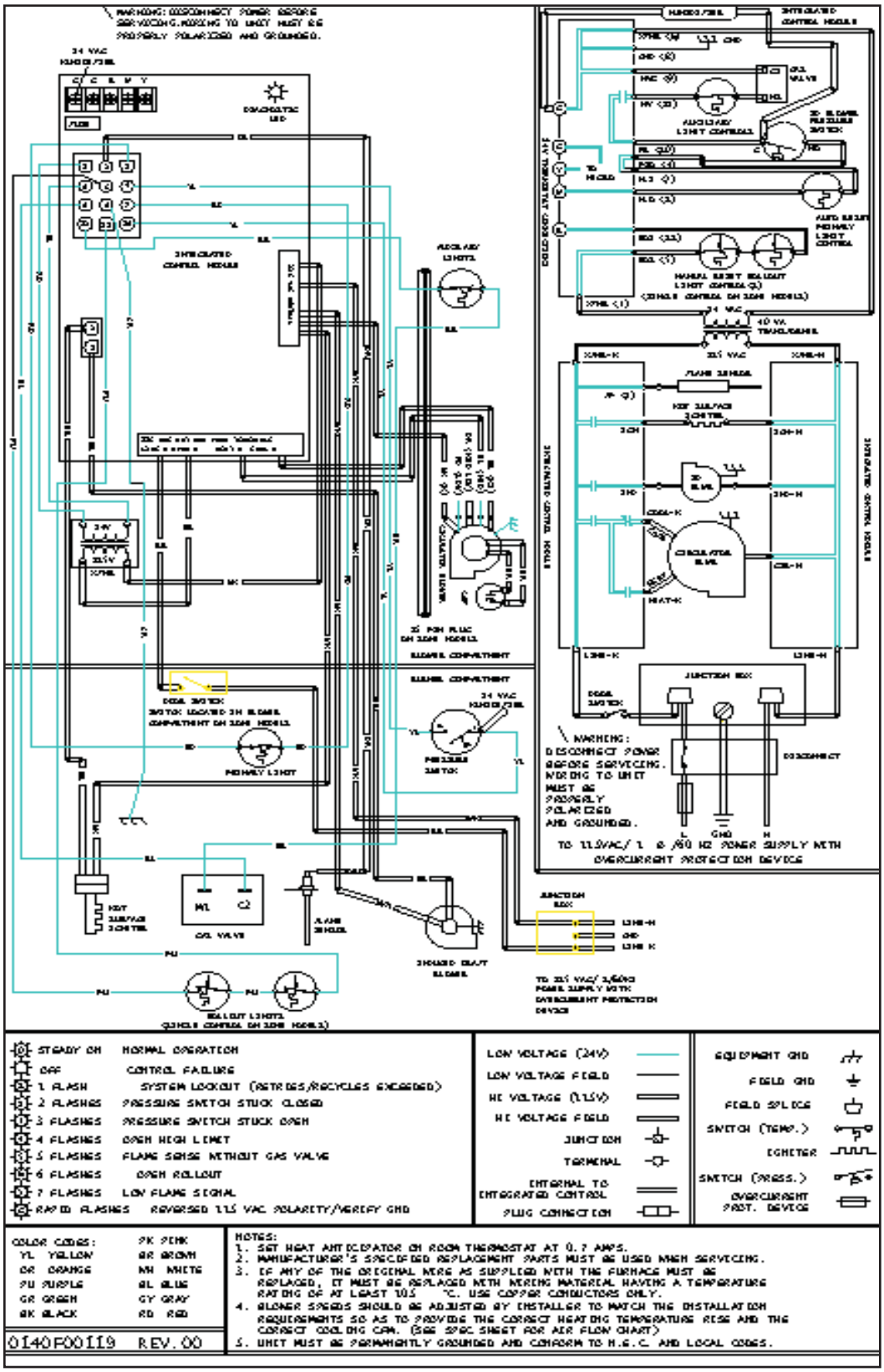

WARNING

High Voltage: Disconnect all power before servicing or installing this unit. Multiple power sources may be present. Failure to do so may cause property damage, personal injury, or death.

Wiring is subject to change. Always refer to the wiring diagram on the unit for the most up-to-date wiring

ACCESSORIES

Model	Description	GMS8 0453***	GMS8 0703***	GMS8 0704***	GMS8 0904***	GMS8 0905***	GMS8 1155***	GMS8 1405***
LPT-00A	Propane (LP) Conversion Kit	√	√	√	√	√	√	√
HA02	High-Altitude Natural Gas Kit (7,000+ ft)	√	√	√	√	√	√	√
AFE18-60A	Fossil Fuel Kit	√	√	√	√	√	√	√
FTK-03A	Twinning Kit	√	√	√	√	√	√	√
Downflow Sub-base for:								
SBT14	14” Furnace							
SBT17	17½” Furnace							
SBT21	21” Furnace							

Model	Description	GDS8 0453AXB	GDS8 0703AXB	GDS8 0904BXB	GDS8 1155CXB	GHS8 0453AXB	GHS8 0704BXB	GHS8 0905CXB
LPT-00A	Propane (LP) Conversion Kit	√	√	√	√	√	√	√
HA02	High-Altitude Natural Gas Kit (7,000+ ft)	√	√	√	√	√	√	√
AFE18-60A	Fossil Fuel Kit	√	√	√	√	√	√	√
FTK-03A	Twinning Kit	√	√	√	√	√	√	√
Downflow Sub-base for:								
SBT14	14” Furnace	√	√					
SBT17	17½” Furnace			√				
SBT21	21” Furnace				√			

Goodman Manufacturing Company, L.P., reserves the right to discontinue, or change at any time, specifications or designs without notice or without incurring obligations. © 2009 • Goodman Manufacturing Company, L.P. • Houston, Texas • Printed in the USA.