Goodman®

Air Conditioning & Heating

GGM Series

High-Efficiency Return Grille-Mount Electronic Air Cleaner

Product Specifications

The Goodman® brand High-Efficiency Return Grille-Mount Electronic Air Cleaner is designed to remove airborne contaminants down to 0.01 micron. The GGM Series helps protect and prolong the operating efficiency of your heating and cooling equipment.

Standard Features

- Pre-filters (2) are constructed of aluminum mesh to prevent lint and large particles from entering the collecting cells
- Collecting cells (2) are constructed of heavy-gauge aluminum for durability and ease of maintenance
- Plastic intake grille is easy to wipe clean
- Hinged, swing-out door allows easy access to filters
- Automatic interlock switch disconnects power when door is opened
- Electronic Air-proving Switch (AS) allows for quick wiring; automatically cycles air cleaner on/off with the system fan
- Performance indicator light (green LED) indicates high voltage to the collecting cells, ensuring air cleaner is operating properly at a glance
- Solid-state power board is manufactured on site for high reliability and long life; uniquely equipped with a variable resistor (potentiometer) to adjust high voltage output, if necessary

Cabinet Features

- Durable powder coat paint finish on heavy gauge steel resists abrasion and provides trouble-free wall or ceiling mount installation
- Holes are provided to facilitate mounting to duct work
- Easily installs on the wall or ceiling in the main return duct of a central forced air heating/cooling system; slides into ceiling box installed within trusses on 24" centers without structural alterations

5 YEAR PARTS LIMITED WARRANTY*

ISO 9001

* Full warranty details available at www.goodmanmfg.com.

SPECIFICATIONS

Specifications	AGM20AS-A Model
House Size	N/A
Airflow	up to 2000 cfm (up to 3398 m³/hr)
Duct Size	22” x 29.1” (55.9 x 73.9 cm)
Cabinet Dimensions	31.4” x 24.4” x 7” (79.8 x 62 x 17.8 cm)
Weight	38 lbs (17.5 kg)
Power	120 v / 60 hz / 30 watts

DIMENSIONS

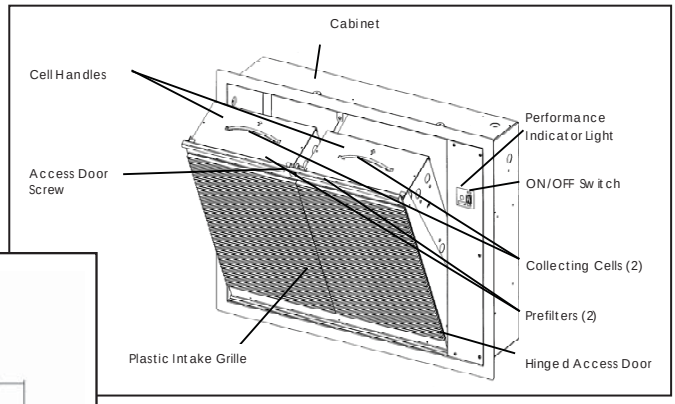

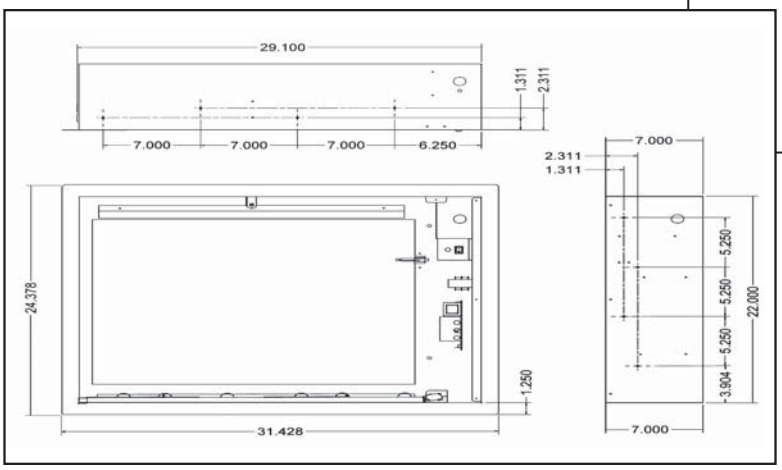

ACCESSORIES

DAX Detergent Size	Part #
32 oz (1 L) Spray Bottle	Part #9900
1.1 gal (4 L) Jug	Part #9901

To keep the lifetime filter system at its best, wash collecting cells and pre-filters with DAX Electronic Air Cleaner Detergent.

FOR MORE INFORMATION, CALL THE AIR CLEANER HELP LINE TOLL FREE @ 1-800-267-8305

Goodman Manufacturing Company, L.P., reserves the right to discontinue, or change at any time, specifications or designs without notice or without incurring obligations. © 2008-2009 • Goodman Manufacturing Company, L.P. • Houston, Texas • Printed in the USA.