Goodman®

Air Conditioning & Heating

DMH900

Whole-House HEPA Air Cleaner

Product Specifications

with Ultraviolet Light & Photo-Catalytic Oxidation Filter

The Goodman® brand DMH900 Whole-House Air Cleaner uses HEPA, UVC Germicidal Lights (non-ozone producing) and CinQuartz® Photo-Catalytic Oxidation to help filter and sterilize the air. This unit removes and destroys allergens and atmospheric dust, as well as biological and chemical contaminants and odors down to 0.3 micron. The DMH900 can be mounted in a variety of positions: duct-mounted, collar-mounted, or free-standing.

Standard Features

- 99.97% efficient at removing particles down to 0.3 micron (1/84,000 of an inch) and larger
- Carbon pre-filter protects the HEPA filter while removing odors, lint, hair and larger particles
- Two UVC germicidal lights enclosed in an anodized UV reflector to intensify UV rays
- The UVC light and CinQuartz® Photo-Catalytic Oxidation (PCO) filter decompose organic materials into basic molecules such as H_2O and CO_2
- Carbon/ Potassium Permanganate Final Filter for removal of Volatile Organic Compounds (VOC's) and light gases
- Motor delivers 250 CFM of pure air, without adding static pressure to the HVAC system
- Versatile installation: duct-mounted, collar-mounted, or free-standing

Cabinet Features

- One-piece steel cabinet wrap
- Powder-coat paint finish
- Pre-punched openings and mounting template for easier installation; no external ducting required

5 YEAR PARTS LIMITED WARRANTY*

ISO 9001

* Full warranty details available at www.goodmanmfg.com.

Specifications

	DMH900	
Airflow	250 CFM	425 m³/hr
Carbon Pre-filter	Replace every 3-6 months	
Long-Life, 99.97% HEPA Media	40 ft² − Replace every 2-3 years	3.7 m² − Replace every 2-3 years
Germicidal UV Light (2 Bulbs)	Replace every 13,000 hours or 2 years	
CinQuartz® Substrate PCO Filter	Replace every 13,000 hours or 2 years	
Carbon Final Filter	Replace every year	
Cabinet Dimensions: H x W x D	29½” x 16¼” x 12¾”	74.9 x 41.3 x 32.4 cm
Intake Duct Fitting	14½” x 3¾” or 8” (dia)	36.8 x 9.5 cm or 20.3 cm (dia)
Outflow Duct Fitting	14½” x 4⅓” or 8” (dia)	36.8 x 11.1 cm or 20.3 cm (dia)
Input Voltage	120 V/ 60 Hz	
Power Consumption	200 watts	
Power Cord	10.0 ft.	3.05 m
Unit Weight	45 lbs	20.4 kg

Replacement Filters & Lamps

Part Number	Description	Replace Every
DMH4-0400	99.97% HEPA Media Filter	2-3 years
DMH4-0855	Pre-filter Carbon	3-6 months
DMH4-1002	Mounting Kit: (2) 8” Collars with 16 Screws	
DMH4-1004	Mounting Kit: (4) 8” Collars with 32 Screws	
DM900-0191	UVC Lamp: Includes lamp support clip	2 years
DM900-0450	Photo-Catalytic Oxidation (PCO) Filter	2 years
DM900-0810	Final Filter, Carbon/ Potassium Permanganate	1 year
DM900-1002	UV Lamp & PCO Filter Kit: contains 2 UV lamps, 2 lamp support clips and I PCO filter, gloves, alcohol wipe	2 years

How It Works

The Air Cleaner has been designed to be installed on the return air duct to eliminate airborne pollutants that are carried through the return air ducts of the heating/cooling system. A portion of this return air passes through an opening on the rear of the unit and then through a five-stage filtration system.

1. An efficient pleated carbon pre-filter removes lint and large particles to extend the life of the HEPA filter.
2. A long-life, 99.97% HEPA (High Efficiency Particulate Air) Media Filter captures particles 0.3 micron and larger.
3. A reflection chamber with two Ultraviolet Germicidal (non-ozone producing) Lamps that emit UVC light rays to kill or inhibit bacteria, viruses, mold, fungus, and microbial growth.
4. The Photo-Catalytic Oxidation (PCO) Filter is a Quartz media coated with nano-particles of Titanium Dioxide (TiO_2). The combined action of the UV light and the TiO_2 decomposes organic materials into basic molecules such as H_2O and CO_2 and reduces odors and Volatile Organic Compounds (VOCs) as a result.
5. A Carbon/ Potassium Permanganate final filter further reduces VOC's and light gases.
6. Clean air is then discharged back into the return air duct.

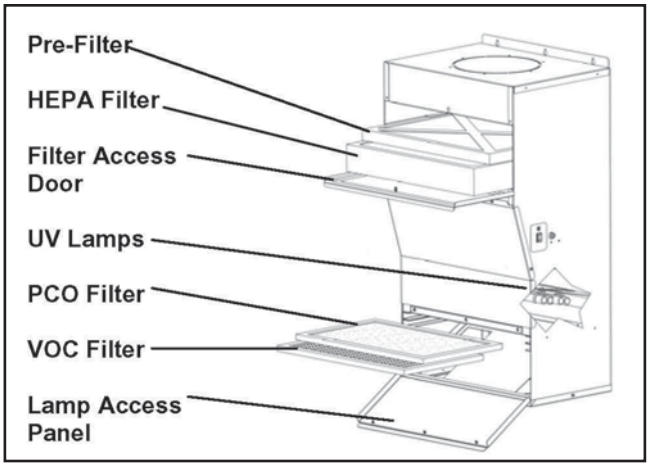

Installation Versatility

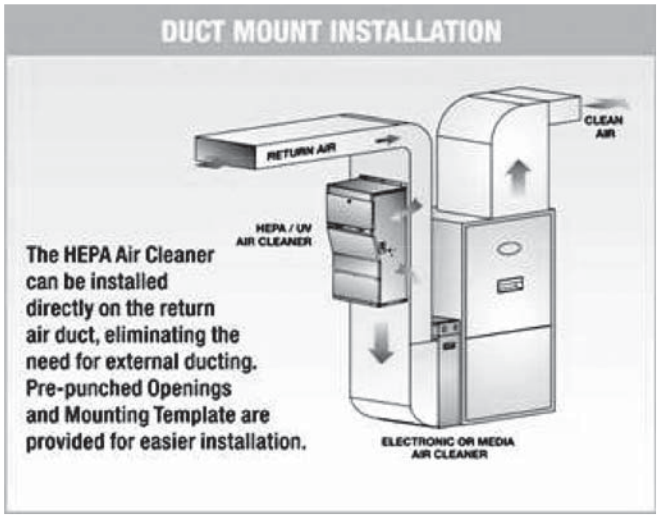

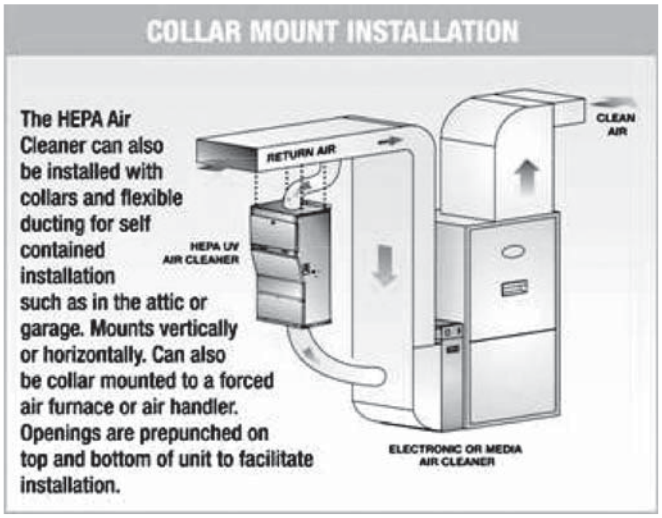

For more information,
call the air cleaner help line toll-free
at 1-800-267-8305

Notes

Goodman Manufacturing Company, L.P., reserves the right to discontinue, or change at any time, specifications or designs without notice or without incurring obligations. © 2008-2009 • Goodman Manufacturing Company, L.P. • Houston, Texas • Printed in the USA.