Goodman®

Air Conditioning & Heating

# Product Specifications

## 1½ to 5 Tons

# ASPF

## Multi-Position Air Handler with Energy-Saving Motor

The Goodman® brand ASPF Multi-Position Air Handler is suitable for use with refrigerants R-410A and R-22. This unit's blower design includes an EEM fixed-speed motor that can enhance the efficiency of air conditioners and heat pumps.

### Standard Features

- Suitable for use with refrigerants R-410A and R-22
- Check flowrater expansion device for cooling and heat pump applications
- EEM fixed-speed motor
- Enhances the performance of your Goodman air conditioner or heat pump
- Multi-position — upflow, downflow or horizontal
- Built-in coil has horizontal, vertical, and downflow drain pans with secondary drain connections
- Complies with the Factory-sealed Air Handling Credit as listed in the 2001 Florida Building Code, Chapter 13, Section 610.2.A.2.1
- AHRI Certified
- ETL Listed

### Cabinet Features

- Fully insulated, painted steel cabinet with attractive Architectural Gray finish
- Built-in filter rack for 1" filter (filter not included)
- Low-voltage cabinet connections
- Power supply on top
- Low-voltage entry on top or side
- Factory-sealed to achieve 2% or less leakage rate at 1.0" water gauge external duct static pressure

10 YEAR PARTS LIMITED WARRANTY*

GoodCare EXTENDED SERVICE PLAN

ETL LISTED

ARI PERFORMANCE CERTIFIED

ISO 9001

* To receive the 10-Year Parts Limited Warranty, online registration must be completed within 60 days of installation. Online registration is not required in California or Québec. Full warranty details available at www.goodmanmfg.com.

DARE to COMPARE

# NOMENCLATURE

| A | S | P | F | 2405 | 1 | 6 | AA |
|---|---|---|---|---|---|---|---|
| 1 | 2 | 3 | 4 | 5,6,7,8 | 9 | 10 | 11,12 |

**Brand**
A Single-piece Air Handler

**Unit Application**
C Ceiling Mount PSC Motor
D Downflow PSC Motor
E Multi-Position Variable-Speed Motor
R Multi-Position PSC Motor
S Multi-Position EEM Motor
W Wall Mount PSC Motor

**Cabinet Finish**
U Unpainted
P Painted
N Uncased

**Expansion Device**
F Flowrater
T Expansion Valve

**Engineering ***
Major/ Minor Revisions
* Not used for inventory management

**Refrigerant Charge**
No Digit = R-22 only
6 = R-410A or R-22

**Electrical**
1 208/240 V, 1 Phase, 60 Hz

**Nominal Capacity Range @ 13 SEER**

**Multi-Position & Downflow Applications**
1729 1½ to 2½ Tons (for Export Systems)
1830 1½-3½ Tons
3642 3-3½ Tons

**Ceiling Mount & Wall Mount Applications**
(Nominal Cooling Capacity/ Electric Heat kW)
1805 1½ Tons Cooling/ 5 kW Electric Heat
2405 2 Tons Cooling/ 5 kW Electric Heat
3608 3 Tons Cooling/ 8 kW Electric Heat

# SPECIFICATIONS

| | ASPF 183016 | ASPF 303616 | ASPF 313716 | ASPF 426016 |
|---|---|---|---|---|
| **Nominal Ratings** | | | | |
| Cooling (BTU/h) | 18,000 - 30,000 | 30,000 - 36,000 | 30,000 - 36,000 | 42,000 - 60,000 |
| CFM (High/ Low) | 1,085 / 650 | 1,350 / 600 | 1,350 / 600 | 2,000 / 1,040 |
| **Blower** | | | | |
| Diameter | 9½” | 10⅝” | 10⅝” | 1015/16” |
| Width | 8” | 10⅝” | 10⅝” | 1011/16” |
| Coil Drain Connection FPT | ¾” | ¾” | ¾” | ¾” |
| **Service Valve** | | | | |
| Liquid | ⅜” | ⅜” | ⅜” | ⅜” |
| Suction | ¾” | ⅞” | ⅞” | ⅞” |
| **Electrical Data** | | | | |
| Voltage | 208 / 230 | 208 / 230 | 208 / 230 | 208 / 230 |
| Electric Heat Capacity (kW) | 5, 8, 10 | 3, 5, 6, 8, 10, 15, 20, 21 | 3, 5, 6, 8, 10, 15, 20, 21 | 10, 15, 20, 21 |
| Min Circuit Ampacity | 3.1 / 3.1 | 3.8 / 3.8 | 3.8 / 3.8 | 5.3 / 7.8 |
| Max. Overcurrent Device | 15 / 15 amps | 15 / 15 amps | 15 / 15 amps | 15 / 15 amps |
| Min. / Max VAC | 197 / 253 | 197 / 253 | 197 / 253 | 197 / 253 |
| Blower Motor FLA/ HP | 2.5 / ½ | 3.0 / ¾ | 3.0 / ¾ | 4.2 / ¾ |
| **Ship Weight (lbs)** | 125 | 176 | 176 | 195 |

# DIMENSIONS

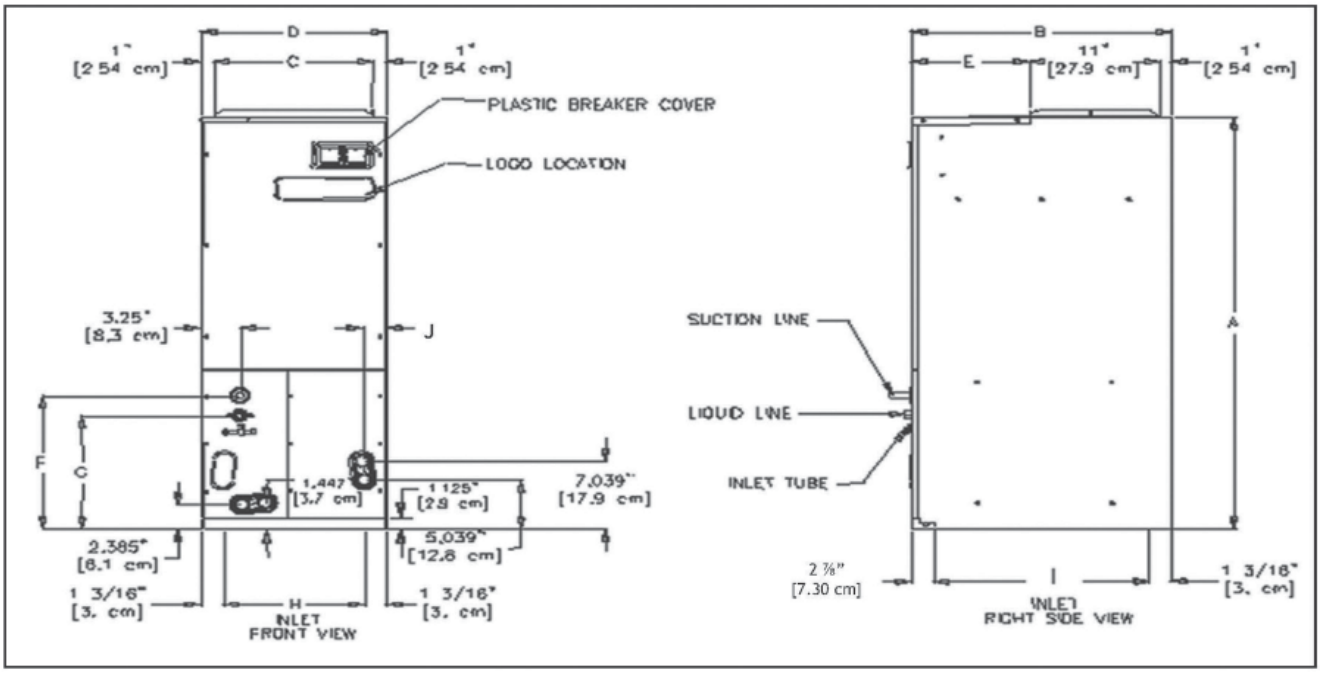


| Model | A | B | C | D | E | F | G | H | I | J |
|---|---|---|---|---|---|---|---|---|---|---|
| ASPF183016 | 46¾” | 22” | 17½” | 19½” | 10” | 14½” | 11 15/16” | 17⅛” | 17 15/16” | 2” |
| ASPF303616 | 53¼” | 24” | 20” | 22” | 12” | 19⅝” | 11 15/16” | 19⅝” | 19 15/16” | 1 13/16” |
| ASPF313716 | 53¼” | 24” | 20” | 22” | 12” | 19⅝” | 11 15/16” | 19⅝” | 19 15/16” | 1 13/16” |
| ASPF426016 | 53¼” | 24” | 20” | 22” | 12” | 19⅝” | 11 15/16” | 19⅝” | 19 15/16” | 1 13/16” |

# Blower Performance

| Model | Motor Speed Tap | CFM deliverd against External Static Pressure | | | | |
|---|---|---|---|---|---|---|
| | | 0.1” | 0.2” | 0.3” | 0.4” | 0.5” |
| ASPF183016 | Low (T1) | 700 | 670 | 650 | 595 | 510 |
| | Med-Low (T2) | 820 | 785 | 765 | 745 | 705 |
| | Medium (T3) | 920 | 900 | 850 | 840 | 815 |
| | Med-High (T4) | 1,075 | 1,055 | 1,015 | 975 | 960 |
| | High (T5) | 1,130 | 1,115 | 1,085 | 1,040 | 1,000 |
| ASPF303616 | Low (T1) | 1,060 | 865 | 600 | 515 | 420 |
| | Med-Low (T2) | 1,105 | 910 | 795 | 745 | 690 |
| | Medium (T3) | 1,165 | 1,070 | 1,020 | 960 | 915 |
| | Med-High (T4) | 1,285 | 1,240 | 1,195 | 1,140 | 1,100 |
| | High (T5) | 1,435 | 1,395 | 1,350 | 1,315 | 1,265 |
| ASPF313716 | Low (T1) | 1,060 | 865 | 600 | 515 | 420 |
| | Med-Low (T2) | 1,105 | 910 | 795 | 745 | 690 |
| | Medium (T3) | 1,165 | 1,070 | 1,020 | 960 | 915 |
| | Med-High (T4) | 1,285 | 1,240 | 1,195 | 1,140 | 1,100 |
| | High (T5) | 1,435 | 1,395 | 1,350 | 1,315 | 1,265 |
| ASPF426016 | Low (T1) | 1,445 | 1,275 | 1,040 | 940 | 855 |
| | Med-Low (T2) | 1,545 | 1,405 | 1,325 | 1,260 | 1,145 |
| | Medium (T3) | 1,660 | 1,610 | 1,555 | 1,490 | 1,415 |
| | Med-High (T4) | 1,905 | 1,870 | 1,810 | 1,750 | 1,695 |
| | High (T5) | 2,115 | 2,070 | 2,000 | 1,965 | 1,915 |

**Notes:**
Assumes dry coil with filter in place; SCFM correction for wet coil = 4%
All ASPF models are shipped from the factory with the speed tap set on T4.

# ASPF****AA WIRING DIAGRAMS

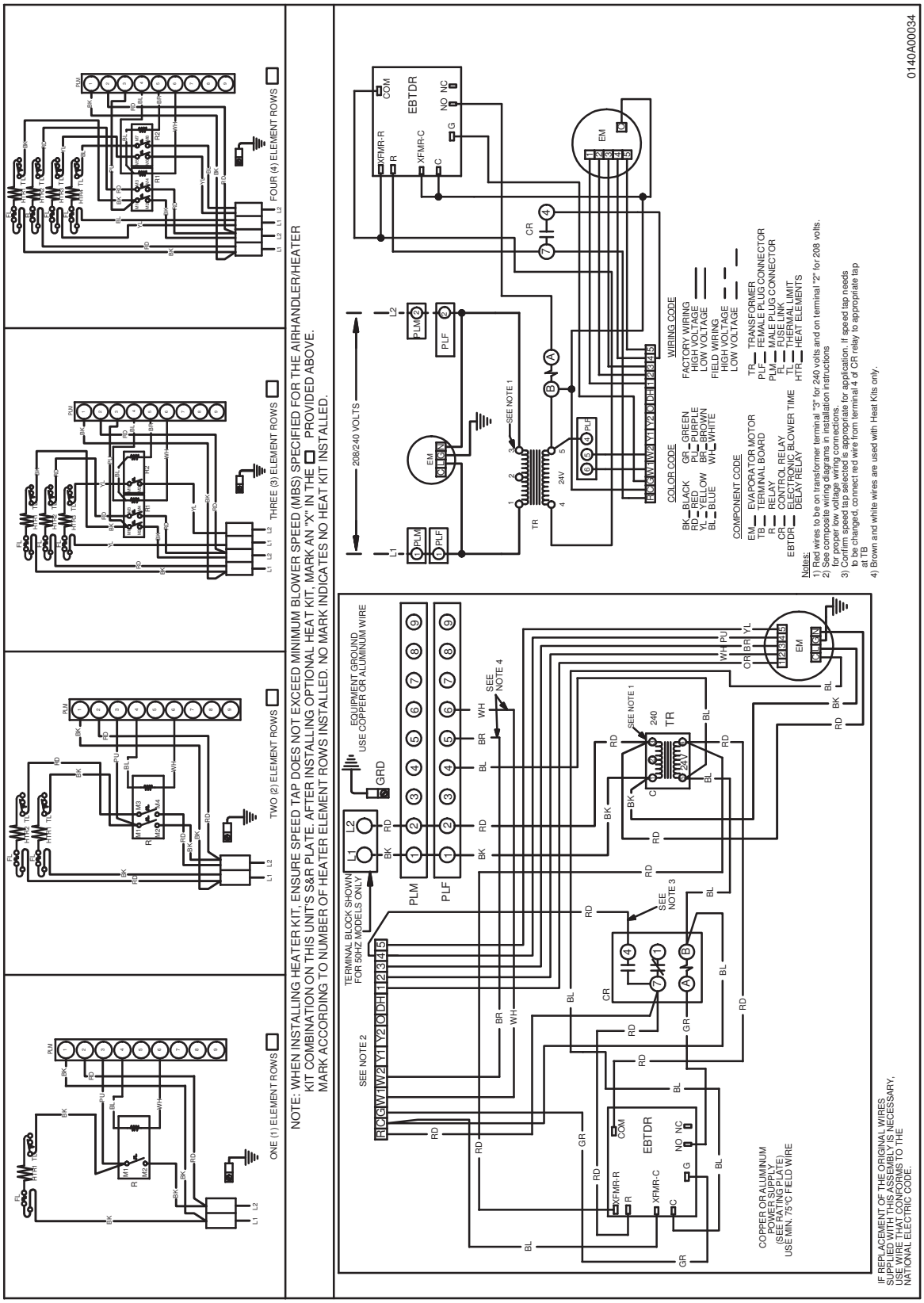


Wiring is subject to change. Always refer to the wiring diagram on the unit for the most up-to-date wiring schematic.

# ASPF****BA WIRING DIAGRAMS

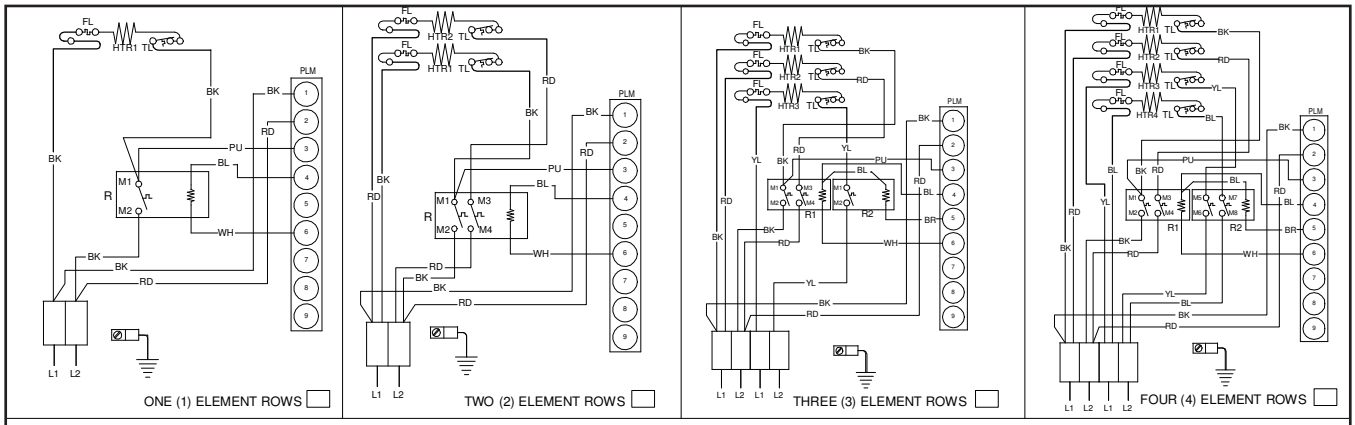


NOTE: WHEN INSTALLING HEATER KIT, ENSURE SPEED TAP DOES NOT EXCEED MINIMUM BLOWER SPEED (MBS) SPECIFIED FOR THE AIRHANDLER/HEATER KIT COMBINATION ON THIS UNIT'S S&R PLATE. AFTER INSTALLING OPTIONAL HEAT KIT, MARK AN "X" IN THE ☐ PROVIDED ABOVE. MARK ACCORDING TO NUMBER OF HEATER ELEMENT ROWS INSTALLED. NO MARK INDICATES NO HEAT KIT INSTALLED.

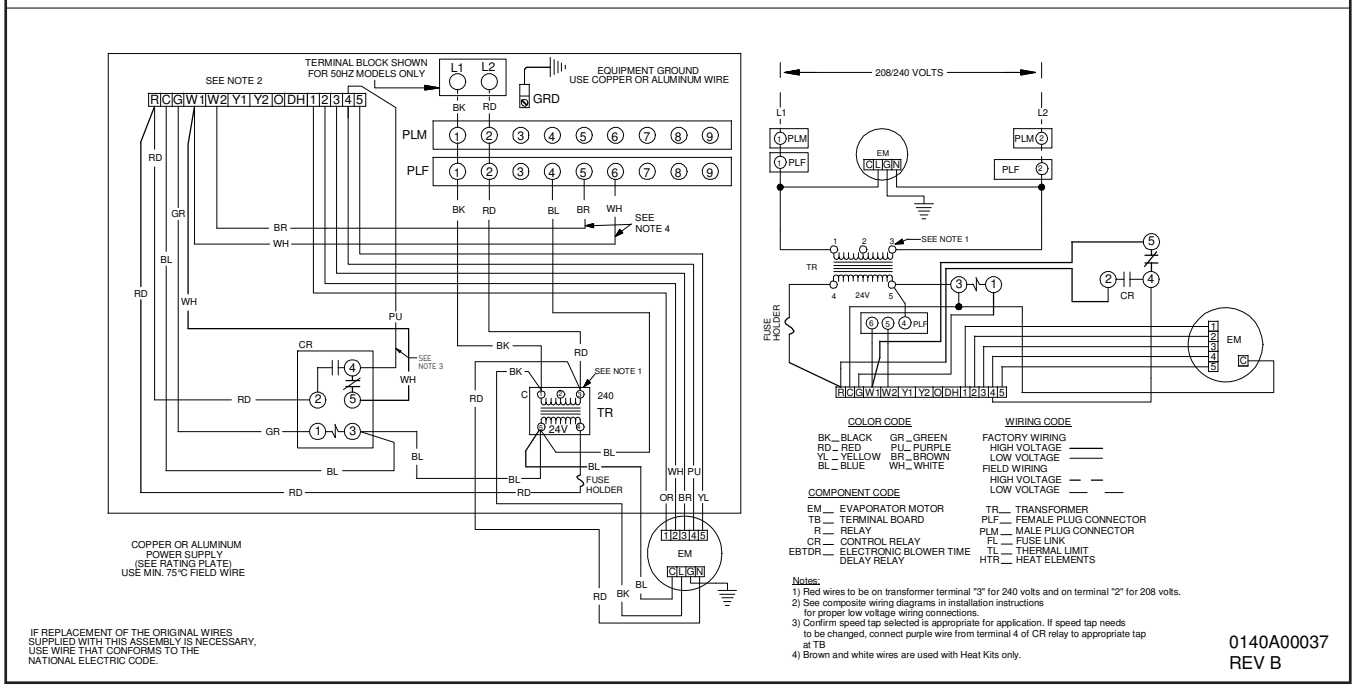


Wiring is subject to change. Always refer to the wiring diagram on the unit for the most up-to-date wiring schematic.

| | |
|---|---|
| **WARNING** | **High Voltage:**<br>**Disconnect all power before servicing or installing this unit. Multiple power sources may be present. Failure to do so may cause property damage, personal injury, or death.** |

# Accessories

## Heat Kit Selection

| | ASPF 183016 | ASPF 303616 | ASPF 426016 |
|---|---|---|---|
| HKR-03* | X | X | X |
| HKR-05*, HKR-05C* | X | X | X |
| HKR-06* | X | X | X |
| HKR-08*, HKR-08C* | X[1] | X[1] | X |
| HKR-10*, HKR-10C* | X[1] | X[1] | X |
| HKR-15C* | X[2] | X[2] | X[1] |
| HKR-20C* | | X[2] | X[1] |
| HKR-21C* | | X[2] | X[1] |
| ^ HKR3-15* | X[2] | X[2] | X[1] |
| ^ HKR3-20* | | X[2] | X[1] |

* Revision level that may or may not be designated
C Circuit breaker option
^ Heat kit requires three-phase power supply
[1] Air handler must be on speed tap 2, 3, 4, or 5.
[2] Air handler must be on speed tap 4 or 5.

## Single Point Kit **

| Model | HKR-15C | HKR-20C | HKR-21C |
|---|---|---|---|
| SPW-01 | X | X | X |

** Must be installed along with any of the above compatible heat kits. This kit will fit any ASPF air handler as long as a compatible heat kit is installed in the unit.

## Filters

| ASPF | Filter # | Qty Required |
|---|---|---|
| 1830 | FIL-36-42 | 1 |
| 3036 | FIL 48-61 | 1 |
| 4260 | FIL 48-61 | 1 |

## Expansion Valve Kits for Air Conditioning and Heat Pump Applications

| Kit Number | Description | Application | Refrigerant | Tonnage: Outdoor Unit |
|---|---|---|---|---|
| XVB18-36C | 20% Bleed Valve | AC Only | R-22 | 1½ - 3 Ton |
| XVB42-60C | 20% Bleed Valve | AC Only | R-22 | 3½ - 5 Ton |
| XV18-36C | Non-bleed Valve | AC Only | R-22 | 1½ - 3 Ton |
| XV42-60C | Non-bleed Valve | AC Only | R-22 | 3½ - 5 Ton |
| TX2N2 | Non-bleed Valve | AC or HP | R-22 | 1½ - 2 Ton |
| TX3N2 | Non-bleed Valve | AC or HP | R-22 | 2½ - 3 Ton |
| TX5N2 | Non-bleed Valve | AC or HP | R-22 | 3½ - 5 Ton |
| TX2N4 | Non-bleed Valve | AC or HP | R-410A | 1½ - 2 Ton |
| TX3N4 | Non-bleed Valve | AC or HP | R-410A | 2½ - 3 Ton |
| TX5N4 | Non-bleed Valve | AC or HP | R-410A | 3½ - 5 Ton |

## Drain Pan Insulation Kits

### Downflow Applications

| Chassis Size | Insulation Kit |
|---|---|
| Small (15½”) | DPI18-30/20 |
| Medium (19½”) | DPI36-42/20 |
| Large (22”) | DPI48-60/20 |

Note: Each kit contains enough material to modify 20 coils

### Horizontal Applications

| Chassis Size | Insulation Kit |
|---|---|
| Small (15½”) | DPIH18-32 |
| Medium (19½”) | DPIH36-42 |
| Large (22”) | DPIH48-61 |

Note: Each kit contains enough material to modify 20 coils

*Goodman Manufacturing Company, L.P., reserves the right to discontinue, or change at any time, specifications or designs without notice or without incurring obligations. © 2009 • Goodman Manufacturing Company, L.P. • Houston, Texas • Printed in the USA.*